SITE DEVELOPMENT PLANS FOR

WASH N ROLL

1206 WEST AVENUE
CUMBERLAND COUTNY
CROSSVILLE, TENNESSEE

GRESHAM SMITH PROJECT NO. 45251.06

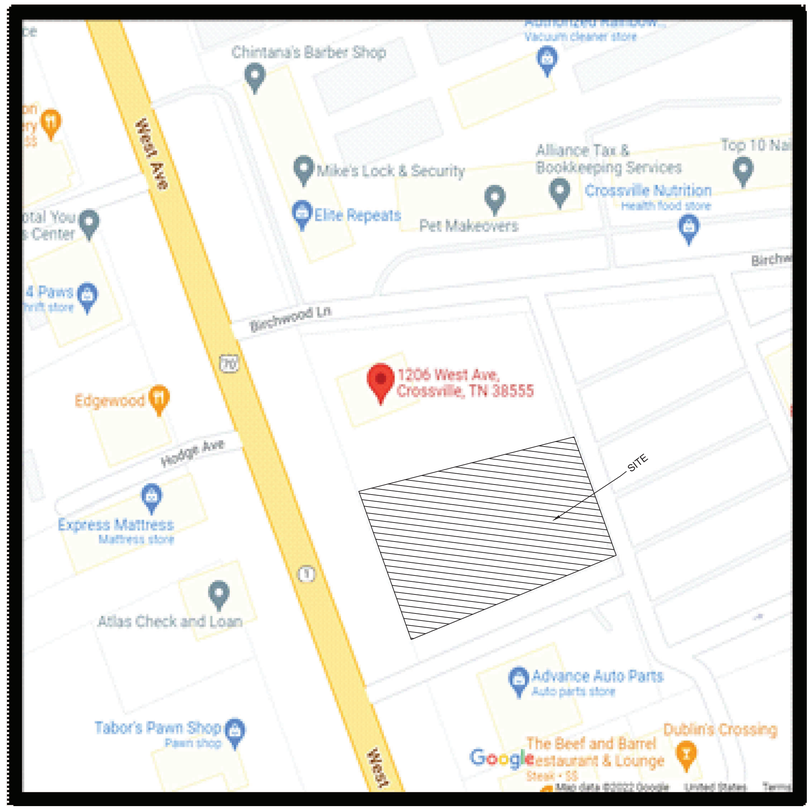

VICINITY MAP
NOT TO SCALE

Sheet List Table	
Sheet Number	Sheet Title
C000	COVER SHEET
C001	GENERAL NOTES
C200	SITE LAYOUT PLAN
C300	GRADING PLAN
C400	INITIAL EPSC PLAN
C401	FINAL EPSC PLAN
C500	SITE UTILITY PLAN
C901	SITE DETAILS
C902	SITE DETAILS

OWNER / DEVELOPER

WNRI HOLDINGS, LLC
P.O. BOX 1955
Mt. Juliet, TN 37121
Brian Peterson
SVP Aquisitions & Development
763.370.8345

CIVIL ENGINEER

Gresham Smith

222 Second Avenue South
Suite 1400
Nashville, TN 37201

Civil Contact: LEVI SCIARA
Phone: 615.770.8213
Email: levi.sciara@greshamsmith.com

Tennessee 811

IT IS THE CONTRACTORS RESPONSIBILITY TO CONTACT UTILITY COMPANIES PRIOR TO ANY CONSTRUCTION AS THE LOCATION OF UTILITIES SHOWN ON THESE PLANS ARE APPROXIMATE AND POSSIBLY INCOMPLETE. THEREFORE CERTIFICATION TO THE LOCATION OF ALL UNDERGROUND UTILITIES IS WITHHELD.

FLOOD NOTE:

PORTIONS OF THE PROPERTY ARE LOCATED IN ZONE 'X' AS NOTED ON FEMA MAP PANEL 47035C0308D, DATED NOVEMBER 16, 2077.

This drawing is being transmitted at the direction of the owner. This drawing was generated as a native dwg. Since CAD information is subject to appear differently in different software, in different versions, or with different settings, there may be a variance between what is seen and printed from the use of this file outside of GS&P. By acceptance of this information, you agree that you will not use these drawings in whole or in part for any purpose or project other than this project.

CAD files are being transmitted for your convenience and do not represent the contract documents. In all cases, the signed and sealed contract documents shall take precedence over the CAD files.

It is the responsibility of the contractor to verify existing horizontal and vertical control benchmarks and to properly tie any proposed layout work to existing benchmarks. The contractor shall not assume any datum or coordinate system. The contractor shall be responsible for verifying any coordinate or dimensions indicated on the signed and sealed contract drawings and shall not rely solely on the CAD file for layout purposes Report any discrepancies to the Engineer prior to proceeding with the work.

If you accept these drawings you waive all claims against the engineer and owner arising from the use of these drawings. In addition to the fullest extent permitted by law, you agree to indemnify and hold the engineer and owner harmless from any damage, liability or cost, including reasonable attorney fees and costs of defense arising from the use of these drawings. The architect/engineer makes no warranty regarding the fitness of these drawings for a particular purpose. These drawings may not be used as shop drawings or any other use which fulfills the contractual obligation of the contractor to construct the project as governed by his agreement with the owner.

By acceptance of these drawings you agree to these terms and conditions. If you do not agree to these terms and conditions, we request that you return all documents which have been transmitted to you, as well as all copies electronic or otherwise and you agree to not use them for any purpose.

PRELIMINARY - NOT FOR CONSTRUCTION

Gresham Smith

GreshamSmith.com

222 Second Avenue South
Suite 1400
Nashville, TN 37201

615.770.8100

WASH N ROLL
WNRI HOLDINGS, LLC
P.O. Box 1955
Mt. Juliet, TN 37121

JAMES LEVI SCIARA
REGISTERED ENGINEER
No. 120751
STATE OF TENNESSEE

Levi Sciara

This sheet has been signed, sealed, and dated digitally

Revision		
No.	Date	Description

COVER SHEET

C000

45251.06
06.02.2022

This Line Is 3 Inches When Printed Full Size

\\global.gspdata\vnfna_nf08\452510601\Work\01CAD\06LP\Sheets\4525106_C-000.dwg - Malachi Soldner - 6/3/2022 10:09:21 AM

GENERAL NOTES:

1. THE CONTRACTOR SHALL BE RESPONSIBLE FOR COMPLYING WITH APPLICABLE FEDERAL, STATE, AND LOCAL REQUIREMENTS, TOGETHER WITH EXERCISING PRECAUTIONS AT ALL TIMES FOR THE PROTECTION OF PERSONS (INCLUDING EMPLOYEES) AND PROPERTY. IT IS THE SOLE RESPONSIBILITY OF THE CONTRACTOR TO INITIATE, MAINTAIN, AND SUPERVISE ALL SAFETY REQUIREMENTS, PRECAUTIONS, AND PROGRAMS IN CONNECTION WITH THE WORK.
2. THE CONTRACTOR SHALL COMPLY WITH ALL LOCAL CODES, OBTAIN ALL PERMITS, AND PAY ALL FEES REQUIRED FOR THE EXECUTION OF THE WORK.
3. THE CONTRACTOR SHALL COMPLY WITH ALL LOCAL CODES, OBTAIN ALL PERMITS, AND PAY ALL FEES REQUIRED FOR THE EXECUTION OF THE WORK.
4. THE CONTRACTOR SHALL VERIFY THE EXACT LOCATION OF ALL EXISTING UTILITIES, INCLUDING IRRIGATION LINES, TAKE CARE TO PROTECT UTILITIES THAT ARE TO REMAIN, AND REPAIR CONTRACTOR CAUSED DAMAGE ACCORDING TO CURRENT LOCAL STANDARDS AND AT THE CONTRACTOR'S EXPENSE. COORDINATE ALL CONSTRUCTION WITH THE APPROPRIATE UTILITY COMPANY. RELOCATE IRRIGATION LINES AS NECESSARY FOR CONSTRUCTION.
5. CONTRACTOR SHALL PROVIDE PROTECTION TO ALL PAVEMENT, FENCES, TREES, AND STRUCTURES THAT ARE TO REMAIN. CONTRACTOR-CAUSED DAMAGE SHALL BE REPAIRED TO MATCH EXISTING CONDITIONS AT NO ADDITIONAL COST TO THE OWNER.
6. PRIOR TO THE COMMENCEMENT OF CONSTRUCTION, THE CONTRACTOR SHALL PROVIDE THE ENGINEER WITH A CONSTRUCTION SCHEDULE FOR VARIOUS SITEWORK ELEMENTS SO THAT PERIODIC SITE VISITS MAY BE COORDINATED TO ALLOW FOR TIMELY INSPECTION CERTIFICATION OF CONSTRUCTION AND REPORTS TO AGENCIES, AND TO AVOID DELAYS IN ISSUANCE OF CERTIFICATE OF OCCUPANCY.

DEMOLITION AND PROTECTION NOTES:

1. DEMOLITION AND REMOVAL OPERATIONS SHALL COMMENCE ONLY AFTER ALL INITIAL EROSION AND SEDIMENTATION CONTROL MEASURES ARE IN PLACE AND FUNCTIONAL.
2. THE CONTRACTOR SHALL DEVELOP AND IMPLEMENT A WASTE MANAGEMENT PLAN PRIOR TO THE COMMENCEMENT OF WORK. AT A MINIMUM THE PLAN SHALL INCLUDE:
   - 2.1. THE PROPER PROCEDURES FOR DISPOSAL OR RECLAIMING FOR REUSE / RECYCLING.
   - 2.2. DESIGNATED AREAS FOR WASTE MANAGEMENT CONTAINERS. CONTAINERS SHALL BE PROPERLY MARKED FOR ALLOWABLE AND PROHIBITED ITEMS AND MATERIALS.
   - 2.3. DESIGNATED CHEMICAL STORAGE AREAS, APPROPRIATE CHEMICAL STORAGE CONTAINERS, AND PROCEDURES FOR SPILL CONTROL. CHEMICALS SHALL NOT BE PERMITTED TO INFILTRATE TO GROUNDWATER OR BE PUMPED UNTREATED FROM PIT DEWATERING FACILITIES.
   - 2.4. A CONCRETE WASHOUT AREAS LOCATED AWAY FROM DESIGNATED CONSTRUCTION EXIT.
3. PROVIDE NEAT AND STRAIGHT SAWCUTS OF EXISTING PAVEMENT ALONG ALL LIMITS OF PAVEMENT DEMOLITION.
4. ALL DEMOLISHED MATERIALS BECOME THE PROPERTY OF THE CONTRACTOR UNLESS OTHERWISE DESIGNATED. DISPOSE OF OFF THE OWNER'S PROPERTY IN A LEGAL MANNER. PROLONGED STORAGE OR THE SALE OF DEMOLISHED ITEMS OR MATERIALS ON-SITE IS NOT PERMITTED WITHOUT PRIOR NOTIFICATION AND CONSENT OF OWNER.
5. ALL PAVEMENT, BASE COURSE, SIDEWALKS, CURBS, BUILDINGS, FOUNDATIONS, ETC., IN THE AREA TO BE REMOVED SHALL BE REMOVED FULL DEPTH. EXISTING BASE COURSE MATERIALS MAY BE WORKED INTO THE NEW PAVEMENT OR BUILDING SUBGRADE PROVIDED THAT THE GRADATION, CONSISTENCY, COMPACTION, SUBGRADE CONDITION, ETC., ARE IN ACCORDANCE WITH THE SPECIFICATIONS. BASE COURSE MATERIALS SHALL NOT BE WORKED INTO THE SUBGRADE OF AREAS TO RECEIVE PLANTING.
6. THE CONTRACTOR SHALL USE WATER SPRINKLING AND OTHER SUITABLE METHODS AS NECESSARY TO CONTROL DUST AND DIRT CAUSED BY THE DEMOLITION WORK.
7. ALL EXISTING FEATURES REMAINING AND NOT SPECIFICALLY MENTIONED THAT INTERFERE WITH THE NEW CONSTRUCTION SHALL BE IMMEDIATELY BROUGHT TO THE ATTENTION OF THE ENGINEER. BEFORE PROCEEDING WITH DEMOLITION WORK, NOTIFY THE ENGINEER OF DISCREPANCIES BETWEEN EXISTING CONDITIONS AND THE DRAWINGS.
8. HAZARDOUS MATERIALS ARE NOT ANTICIPATED TO BE ENCOUNTERED. IF SUSPECTED HAZARDOUS MATERIALS ARE DISCOVERED, IMMEDIATELY NOTIFY THE OWNER.
9. CAVITIES LEFT BY STRUCTURE REMOVAL SHALL BE BACKFILLED WITH SATISFACTORY MATERIAL AND COMPACTED TO 98% OF MAXIMUM DENSITY PER ASTM D698 - STANDARD PROCTOR.
10. PAVEMENT MARKINGS TO BE REMOVED SHALL BE PAINTED OVER TO MATCH PAVEMENT OR REMOVED WITH WIRE BRUSHING.
11. EXCEPT AS SHOWN, NO TREES SHALL BE REMOVED AND/OR VEGETATION DISTURBED WITHOUT APPROVAL OF THE ENGINEER.

LAYOUT AND PAVING NOTES:

1. THE CONTRACTOR SHALL CHECK EXISTING GRADES, DIMENSIONS, AND INVERTS IN THE FIELD AND REPORT ANY DISCREPANCIES TO THE ENGINEER PRIOR TO BEGINNING WORK.
2. PROVIDE A SMOOTH AND FLUSH TRANSITION BETWEEN EXISTING TO REMAIN AND NEW PAVEMENT, SIDEWALKS, AND CURBS . FIELD ADJUSTMENT OF FINAL GRADES MAY BE NECESSARY. INSTALL ALL UTILITIES PRIOR TO INSTALLATION OF PAVEMENT.
3. CONCRETE WALKS AND PADS SHALL HAVE A BROOM FINISH CONSTRUCTED PERPENDICULAR TO THE TRAVEL PATH. ALL CONCRETE SHALL BE 4,000 P.S.I. UNLESS OTHERWISE NOTED. CURB RAMPS, SIDEWALK SLOPES, AND DRIVEWAY RAMPS SHALL BE CONSTRUCTED IN ACCORDANCE WITH ALL CURRENT LOCAL REQUIREMENTS. IF APPLICABLE, THE CONTRACTOR SHALL REQUEST INSPECTION OF SIDEWALK AND RAMP FORMS FROM THE AUTHORITY HAVING JURISDICTION PRIOR TO PLACEMENT OF CONCRETE.
4. DIMENSIONS ARE TO THE FACE OF CURB, EDGE OF CONCRETE, OR TO THE FACE OF BUILDING, UNLESS OTHERWISE NOTED.
5. PARKING STRIPES SHALL BE 4-INCH WHITE PAVEMENT PAINT, UNLESS OTHERWISE NOTED. LANE STRIPES SHALL BE 4 INCH PAVEMENT PAINT, COLOR AS INDICATED ON PLAN. STOP BARS AND CROSSWALK MARKINGS SHALL BE 24-INCH WHITE PAVEMENT PAINT.
6. CONCRETE CONTRACTION JOINTS SHALL BE CONSTRUCTED TO A DEPTH OF AT LEAST 1/4 THE CONCRETE THICKNESS AND SHALL DIVIDE CONCRETE ROUGHLY INTO SQUARES WITH MAXIMUM 10-FOOT DIMENSIONS. CONCRETE EXPANSION JOINTS SHALL BE INSTALLED AT MAXIMUM 60-FOOT SPACING AND AT ALL ABUTTING RIGID OBJECTS.
7. MAINTAIN ONE SET OF RECORD DRAWINGS MARKUPS ON THE JOB SITE FOR DISTRIBUTION TO THE ENGINEER UPON COMPLETION.
8. THE CONTRACTOR SHALL PROVIDE AN AS-BUILT SURVEY CONSISTING OF THE FOLLOWING:
   - 8.1. THE SURVEY SHALL BE PREPARED, SIGNED AND SEALED BY A SURVEYOR REGISTERED IN THE STATE IN WHICH THIS PROJECT RESIDES AND SUBMITTED TO THE ENGINEER IN ELECTRONIC FORMAT PRIOR TO COMPLETION OF THE PROJECT. THE SURVEY SHALL BE PREPARED USING THE SAME HORIZONTAL AND VERTICAL DATUM AS THE ORIGINAL SURVEY.
   - 8.2. SHOWING ALL BUILDINGS, CURB LINES, EDGES OF PAVEMENT, SIDEWALKS, AND PARKING STRIPING.
   - 8.3. LOCATING ALL UNDERGROUND UTILITIES WITHIN THE LIMITS OF THE PROJECT INCLUDING: GREASE TRAP, OIL/WATER SEPARATOR, DRAINAGE AND SANITARY STRUCTURES, WATER VALVES, METERS, PIV'S, AND HYDRANTS.
   - 8.4. INCLUDING ALL ACCESSIBLE PATHS, PEDESTRIAN RAMPS AND LANDINGS, AND ACCESSIBLE PARKING AREAS INCLUDING AISLES AND DROP-OFF/PICK-UP AREAS. DIMENSION FULL LENGTH AND WIDTH OF ALL PEDESTRIAN RAMPS AND LANDINGS. SHOW ELEVATIONS AND SLOPES, INCLUDING LONGITUDINAL AND CROSS SLOPES FOR ALL ACCESSIBLE AREAS.

GRADING AND DRAINAGE NOTES:

1. NOTIFY LOCAL UTILITY LOCATOR SERVICE (CALL 811 OR SUBMIT ON-LINE) OF INTENDED DEMOLITION / GRADING / EXCAVATION / UTILITY TRENCHING CONSTRUCTION.
2. THE CONTRACTOR SHALL VERIFY THE EXACT LOCATION OF ALL EXISTING UTILITIES, PROTECT UTILITIES TO REMAIN, AND REPAIR CONTRACTOR-CAUSED DAMAGE ACCORDING TO LOCAL STANDARDS AT CONTRACTOR'S EXPENSE.
3. CONSTRUCT INITIAL TEMPORARY EROSION CONTROL PRIOR TO BEGINNING GRADING OPERATIONS.
4. NO TREES SHALL BE REMOVED NOR VEGETATION DISTURBED EXCEPT AS NECESSARY FOR GRADING PURPOSES. ALL TREES, INCLUDING YOUNG SAPLINGS, PINES, AND UNDERSTORY SPECIES SHALL BE PROTECTED IF THEY FALL OUTSIDE THE PROPOSED LIMITS OF GRADING, EVEN IF THEY ARE NOT LOCATED OR IDENTIFIED ON THE PLANS. DO NOT OPERATE OR STORE HEAVY EQUIPMENT, NOR HANDLE/STORE MATERIALS WITHIN THE DRIPLINES OF TREES TO BE PROTECTED.
5. TREE PROTECTION SHALL CONSIST OF THE FOLLOWING STEPS:
   - 5.1. CONTRACTOR SHALL HIRE A LICENSED LANDSCAPE CONTRACTOR TO OVERSEE TREE PROTECTION.
   - 5.2. PRIOR TO ANY GRADING OPERATIONS, LOCATE TREES TO BE PROTECTED AND NEATLY CUT ROOTS TO A DEPTH OF 30-INCHES AT THE DRIP LINE OR THE DIMENSIONED LIMITS SHOWN USING A UTILITY TRENCHING MACHINE.
   - 5.3. TREAT EXPOSED ROOTS WITH A HORTICULTURAL TREE PRUNING PROTECTION PRODUCT.
   - 5.4. PRUNE TREE LIMBS BY THE SAME PROPORTIONAL PERCENTAGE AS TREE ROOTS REMOVED (I.E., 25% OF ROOTS REMOVED SHALL RESULT IN 25% OF TREE LIMBS REMOVED).
   - 5.5. INSTALL A MINIMUM 4-FOOT HIGH CONSTRUCTION FENCE TO THE LIMITS SHOWN.
   - 5.6. BEGIN CLEARING AND GRADING OPERATIONS.
6. EXISTING CONDITIONS ARE FROM A PRE-CONSTRUCTION TOPOGRAPHIC SURVEY PROVIDED BY (INSERT SURVEYOR NAME IN SSM), DATED (INSERT SURVEY DATE IN SSM).
7. THE CONTRACTOR SHALL VERIFY EXISTING ELEVATIONS AND INVERTS PRIOR TO BEGINNING WORK. INSTALL STORM SEWERS BEGINNING AT THE DISCHARGE TIE POINT ELEVATION AND THEN PROCEEDING UPSTREAM.
8. TOPSOIL SHALL BE STRIPPED FROM ALL CUT AND FILL AREAS, STOCKPILED AND REDISTRIBUTED OVER GRADED AREAS TO A MINIMUM DEPTH OF 6-INCHES. CONSTRUCT TEMPORARY STOCKPILES FREE DRAINING AND PROVIDE EROSION AND SEDIMENTATION CONTROLS AROUND AREA.
9. SATISFACTORY TOPSOIL IS DEFINED AS MATERIAL FREE OF SUBSOIL, CLAY LUMPS, STONES, OBJECTS OVER 1-INCH IN DIAMETER, OR CONTAMINANTS.
10. TOP OF GRATE ELEVATIONS FOR CURB INLETS ARE GIVEN TO THE CENTER OF THE INLETS AT THE FACE OF CURB. THE GRATES SHALL SLOPE LONGITUDINALLY WITH THE PAVEMENT GRADE. ADJUST THE CASTING HOOD TO FALL ALONG THE CURB LINE.
11. IN THE EVENT OF ANY DISCREPANCIES FOUND IN THE DRAWINGS OR IF PROBLEMS ARE ENCOUNTERED DURING CONSTRUCTION, THE CONTRACTOR SHALL NOTIFY THE ARCHITECT/ENGINEER BEFORE PROCEEDING WITH THE WORK.
12. SPOT ELEVATIONS AND CONTOURS REPRESENT PROPOSED FINISHED GRADE AND TOP OF FINISHED PAVEMENT.
13. CONTOUR LINES AND SPOT ELEVATIONS ARE THE RESULT OF A DETAILED ENGINEERING GRADING DESIGN AND REFLECT A PLANNED INTENT WITH REGARD TO DRAINAGE. THE CONTRACTOR IS RESPONSIBLE FOR GRADING ALL AREAS TO POSITIVELY DRAIN. SHOULD THE CONTRACTOR HAVE ANY QUESTION OF THIS INTENT OR ANY PROBLEMS WITH CONTINUITY OF GRADES, THE ENGINEER SHALL BE CONTACTED PRIOR TO BEGINNING WORK.
14. ALL PERMANENT CUT AND FILL SLOPES SHALL BE NO STEEPER THAN 3 HORIZONTAL:1 VERTICAL. TEMPORARY CUT SLOPES SHALL BE NO STEEPER THAN 2 HORIZONTAL:1 VERTICAL UNLESS TEMPORARY SHORING IS PROVIDED, OR UNLESS AUTHORIZED BY A LICENSED GEOTECHNICAL ENGINEER.
15. CONTRACTOR SHALL DISPOSE OF EXCESS MATERIAL OFF THE OWNER'S PROPERTY IN A LEGAL MANNER AT NO ADDITIONAL COST.
16. EXISTING MANHOLE, VALVE AND CATCH BASIN CASTINGS TO REMAIN SHALL BE RESET TO MATCH NEW GRADE. BUILDING ADDITION FINISH FLOOR ELEVATIONS SHALL MATCH EXISTING.
17. ALL CURBS, PAVEMENT AND SIDEWALKS SHALL BE BACKFILLED FLUSH WITH TOPSOIL, SEEDED AND MULCHED.
18. ALL PIPES UNDER PAVED AREAS SHALL BE BACKFILLED WITH CRUSHED STONE. ALL PIPES UNDER LAWN AREAS SHALL BE BACKFILLED WITH SATISFACTORY MATERIAL COMPACTED TO 98% OF MAXIMUM PER ASTM D698 - STANDARD PROCTOR.
19. ALL HEADWALLS SHALL HAVE A MINIMUM 10' x 20' x 1.5' RIP-RAP APRON INSTALLED USING 8" MINIMUM DIAMETER STONE, UNLESS OTHERWISE SPECIFIED.
20. FINAL FINISH GRADE TOLERANCES SHALL BE MAXIMUM 0.10 FOOT ABOVE OR BELOW DESIGN ELEVATIONS WITHIN PAVED AREAS, AND MAXIMUM 0.25 FOOT ABOVE OR BELOW DESIGN FINISH ELEVATIONS IN OTHER AREAS. NO TOLERANCE IS ALLOWED WHEN MAXIMUM OR MINIMUM SLOPES ARE SPECIFIED.
21. ADA PARKING AND LOADING AREAS SHALL NOT EXCEED 2.0% IN ANY DIRECTION. ADA ACCESS ROUTES SHALL NOT EXCEED 2.0% CROSS SLOPE AND 5.0% LONGITUDINAL SLOPE, EXCEPT WHERE ADA RAMPS ARE SPECIFIED. ADA RAMPS SHALL NOT EXCEED 2.0% CROSS SLOPE AND 8.33% LONGITUDINAL SLOPE.
22. EARTHWORK FILL SHALL INCLUDE STRIPPING TOPSOIL AND PLACING ENGINEERED FILL IN MAXIMUM 8" COMPACTED LIFTS WITH DENSITY OF 98% OF MAXIMUM PER ASTM D698 - STANDARD PROCTOR.
23. EXCAVATION FOR THIS PROJECT IS UNCLASSIFIED. A GEOTECHNICAL EXPLORATIONS REPORT NOT CURRENTLY PROVIDED. IT IS THE CONTRACTOR'S RESPONSIBILITY TO REVIEW THE REPORT FOR ANTICIPATED EXCAVATION REQUIREMENTS. ADDITIONAL PAYMENT WILL NOT BE MADE FOR UNANTICIPATED ROCK EXCAVATION, UNLESS OTHERWISE AGREED UPON WITH OWNER PRIOR TO COMMENCEMENT OF ROCK EXCAVATION.
24. PROVIDE AN AS-BUILT SURVEY BY A LICENSED SURVEYOR TO INCLUDE ALL STORMWATER MANAGEMENT FEATURES, UNDERGROUND BASINS, PONDS, BIOSWALES, RAIN GARDENS, WATER QUALITY UNITS, AND OUTLET STRUCTURES.
25. ALL STORM DRAINAGE PIPE SHALL BE CLASS III RCP UNLESS OTHERWISE NOTED. PIPE LENGTHS SHOWN ARE APPROXIMATE TWO-DIMENSIONAL LENGTHS FROM CENTER OF STRUCTURE TO CENTER OF STRUCTURE.
26. IF BLASTING IS REQUIRED, CONTRACTOR SHALL COMPLY WITH APPLICABLE REQUIREMENTS IN NFPA 495, "EXPLOSIVE MATERIALS CODE," AND PREPARE A BLASTING PLAN CONTAINING THE FOLLOWING:
   - 26.1. TYPES OF EXPLOSIVES AND SIZES OF CHARGE TO BE USED IN EACH AREA OF ROCK REMOVAL, TYPES OF BLASTING MATS, SEQUENCE OF BLASTING OPERATIONS, AND PROCEDURES THAT WILL PREVENT DAMAGE TO SITE IMPROVEMENTS AND STRUCTURES ON THE PROJECT SITE AND ADJACENT PROPERTIES.
   - 26.2. SEISMOGRAPHIC MONITORING DURING BLASTING OPERATIONS.
   - 26.3. A BLASTING PLAN KEPT AT THE CONSTRUCTION SITE, ALONG WITH OTHER BLASTING RECORDS REQUIRED. RECORDS SHALL BE AVAILABLE FOR REVIEW BY THE OWNER UPON REQUEST. OBTAIN PERMITS FROM AUTHORITIES HAVING JURISDICTION BEFORE BRINGING EXPLOSIVES TO THE PROJECT SITE. PERFORM BLASTING WITHOUT WEAKENING THE BEARING CAPACITY OF ROCK SUBGRADE AND WITH THE LEAST-PRACTICAL DISTURBANCE OF ROCK TO REMAIN.
   - 26.4. ENGAGEMENT OF A QUALIFIED, INDEPENDENT AGENCY TO PERFORM A PRE-BLAST AND POST-BLAST SURVEY OF ALL STRUCTURES SUBJECT TO BLAST VIBRATIONS. CONTRACTOR SHALL COORDINATE ALL BLASTING ACTIVITIES WITH THIS AGENT, INCLUDING BLASTING PLANS, SCHEDULES, ETC. CONTRACTOR MAY, AT HIS EXPENSE, HIRE A VIBRATION CONSULTANT TO REVIEW THE BLASTING PLAN AND MAKE RECOMMENDATIONS. REVIEW OF THE BLASTING DESIGN, SURVEY, MONITORING, AND TECHNIQUES BY THE ENGINEER OR VIBRATION CONSULTANT SHALL NOT RELIEVE THE CONTRACTOR OF THE RESPONSIBILITY FOR ACCURACY, ADEQUACY, AND SAFETY OF THE BLASTING. NOTHING CONTAINED HEREIN SHALL RELIEVE THE CONTRACTOR OF RESPONSIBILITY FOR CLAIMS ARISING FROM HIS CONSTRUCTION OPERATIONS. IN THE EVENT THAT A PROPERTY OWNER DENIES ACCESS FOR THE PRE-CONSTRUCTION SURVEY OF STRUCTURES AND FACILITIES; THE CONTRACTOR SHALL NOTIFY SUCH PROPERTY OWNER BY CERTIFIED MAIL STATING THAT THIS IS FINAL NOTIFICATION. A COPY OF THE BLASTING RECORDS SHALL BE SUBMITTED TO THE ENGINEER.
   - 26.5. AT LEAST 24 HOURS IN ADVANCE, THE CONTRACTOR SHALL NOTIFY ADJACENT RESIDENCES AND BUSINESSES SUBJECT TO BLASTING VIBRATIONS OF THE INTENT TO BLAST. CONTRACTOR SHALL DISCLOSE THE ANTICIPATED TIME OF DAY AND SCHEDULE FOR BLASTING. SUBMIT NOTICE OF BLASTING COMPLAINTS TO OWNER WITHIN 24 HOURS OF RECEIPT THEREOF. THE NOTICE SHALL IDENTIFY THE ORIGIN OF COMPLAINT AND SHALL CONTAIN A BRIEF DESCRIPTION OF ALLEGED DAMAGES OR OTHER CIRCUMSTANCES UPON WHICH THE COMPLAINT IS PREDICATED. CONTRACTOR SHALL ASSIGN EACH COMPLAINT A SEPARATE NUMBER, IN ASCENDING ORDER, AND SHOW IN EACH NOTICE ALL PREVIOUS COMPLAINT NUMBERS REGISTERED BY THE SAME COMPLAINANT.

SITE UTILITIES NOTES:

1. WATER AND SEWER CONSTRUCTION SHALL BE PERFORMED IN ACCORDANCE WITH APPLICABLE LOCAL CODES AND SPECIFICATIONS.
2. THE CONTRACTOR IS PARTICULARLY CAUTIONED THAT THE LOCATION AND/OR ELEVATION OF THE EXISTING UTILITIES SHOWN IS BASED ON LIMITED TOPOGRAPHIC SURVEYS AND RECORD DRAWINGS. THE CONTRACTOR SHALL NOT RELY ON THIS INFORMATION AS BEING EXACT OR COMPLETE. SHOULD UNCHARTED UTILITIES BE ENCOUNTERED DURING EXCAVATION OPERATIONS, THE CONTRACTOR SHALL NOTIFY THE ARCHITECT/ENGINEER AS SOON AS POSSIBLE FOR INSTRUCTIONS.
3. MAINTAIN 10-FOOT HORIZONTAL AND 18-INCH VERTICAL SEPARATION BETWEEN SANITARY SEWER AND WATER SUPPLY LINES.
4. THE CONTRACTOR IS RESPONSIBLE FOR COORDINATING THE SEQUENCING OF CONSTRUCTION FOR ALL UTILITY LINES SO THAT WATER LINES, GAS LINES, AND UNDERGROUND ELECTRIC DO NOT CONFLICT WITH SANITARY SEWERS OR STORM SEWERS. INSTALL UTILITIES PRIOR TO FINAL PAVEMENT SURFACE CONSTRUCTION.
5. BACKFILL UTILITY TRENCHES UNDER PAVEMENT AREAS WITH CRUSHED STONE. BACKFILL UTILITY TRENCHES IN LAWN AREAS WITH SATISFACTORY FILL MATERIAL COMPACTED TO AT LEAST 98% OF MAXIMUM PER ASTM D698 - STANDARD PROCTOR.
6. ADJUST ALL NEW AND EXISTING-TO-REMAIN UTILITY SURFACE FEATURES, INCLUDING BUT NOT LIMITED TO CASTINGS, FIRE HYDRANTS, VALVE BOXES, PEDESTALS, CLEANOUTS, ETC. TO MATCH PROPOSED FINISH GRADE.
7. THRUST BLOCK ALL WATERLINE FITTINGS WITH CONCRETE (2,500 P.S.I. MIN.) POURED AGAINST UNDISTURBED EARTH TO SUSTAIN 120 PERCENT TEST PRESSURE SPECIFIED. FORM THRUST BLOCKING SO AS TO NOT EMBED JOINTS, BOLTS, VALVE BOXES OR OPERATING NUTS.
8. PROVIDE VENTS AT HIGH POINTS IN WATERLINE AS NECESSARY FOR EXPELLING AIR DURING FILLING OF WATERLINE. PROVIDE BRONZE CORPORATION STOP FOR CLOSING VENT DURING TESTING AND SERVICE. LEAVE VENT COMPONENTS PLUGGED AND ATTACHED TO PIPE AFTER SUCCESSFUL TEST.
9. CONTRACTOR SHALL VERIFY EXISTING ELEVATIONS AND INVERTS PRIOR TO BEGINNING WORK. INSTALL GRAVITY SEWER BEGINNING AT THE TIE POINT ELEVATION AND THEN PROCEEDING UPSTREAM.
10. ALL MANHOLES SHALL HAVE MINIMUM CLEAR OPENING OF 24". ADJUST CASTINGS TO SLOPE LONGITUDINALLY WITH ROAD GRADES AS REQUIRED.
11. CONTRACTOR SHALL MAINTAIN A MARKED-UP SET OF AS-BUILT PLANS SHOWING ALL NEW UTILITIES AND EXISTING UTILITIES ENCOUNTERED DURING CONSTRUCTION. DRAWINGS SHALL INCLUDE VERTICAL AND HORIZONTAL INFORMATION EITHER BY FIELD SURVEY ON THE APPROPRIATE STATE PLANE COORDINATE SYSTEM, OR BY FIELD MEASUREMENTS INCLUDING AT LEAST TWO DIMENSIONS FROM KNOWN SITE FEATURES/MONUMENTS TO EACH MANHOLE, CATCH BASIN, AND PIPING APPURTENANCES.
12. ALL SANITARY SEWER PIPE SHALL BE SDR 35 PVC UNLESS NOTED OTHERWISE.
13. ALL WATER MAINS SHALL BE AWWA C151, PRESSURE CLASS 350 DIP UNLESS NOTED OTHERWISE.
14. ALL FIRE HYDRANT ASSEMBLIES SHALL BE INSTALLED BETWEEN 3' AND 7' FROM PAVED SURFACE.

EROSION PREVENTION AND SEDIMENT CONTROL (EPSC) NOTES:

1. REFER TO STORMWATER POLLUTION PREVENTION PLAN (SWPPP) BOUND NARRATIVE FOR ADDITIONAL REQUIREMENTS.
2. CONSTRUCT TEMPORARY EPSC MEASURES AS SHOWN ON THE DRAWINGS PRIOR TO BEGINNING GRADING OPERATIONS.
3. ALL DRAINAGE STRUCTURES, PIPES WITHIN THE LIMITS OF CONSTRUCTION AND IMMEDIATELY DOWNSTREAM OF THE SITE, AND STORMWATER FACILITIES SHALL HAVE SEDIMENT REMOVED PRIOR TO FINAL ACCEPTANCE.
4. SILT BARRIERS AND SEDIMENT BASINS SHALL BE CLEANED OF ACCUMULATED SEDIMENT WHEN APPROXIMATELY 50% FILLED.
5. ALL GRADED AREAS NOT RECEIVING STONE OR PAVEMENT STABILIZATION SHALL RECEIVE TEMPORARY SEEDING WITHIN 10 DAYS OF REACHING FINAL SUBGRADE ELEVATION.
6. ALL LOCATIONS OF TEMPORARY EPSC DEVICES SHALL BE SUBJECT TO ADJUSTMENT AS DIRECTED BY THE ENGINEER.
7. WHEN THE EPSC DEVICES ARE NO LONGER REQUIRED FOR THE INTENDED PURPOSE (IN THE OPINION OF THE ENGINEER), THEY SHALL BE REMOVED.
8. REPLACE DAMAGED AND WORN OUT SILT BARRIERS AS DIRECTED BY THE ENGINEER.
9. PROVIDE EROSION CONTROL MATTING (NAG75 OR EQUAL) TO SLOPES 3:1 OR STEEPER. EROSION CONTROL MATTING SHALL BE PHOTODEGRADABLE OR BIODEGRADABLE.
10. DEWATERING OF EXCAVATION AREA SHALL BE COMPLETED ONLY WITH PRE-APPROVED PUMPING AND FILTERING EQUIPMENT. PUMPING RATE SHALL NOT EXCEED 80% OF THE RECOMMENDED MAXIMUM RATE BY SEDIMENT TANK / FILTER BAG MANUFACTURER.
11. THE ENGINEER, WHOSE SEAL IS AFFIXED TO THIS DOCUMENT, CERTIFIES THAT THESE PLANS HAVE BEEN PREPARED BY UNDER HIS/HER DIRECT SUPERVISION. THIS PROJECT IS PLANNED TO DISTURB MORE THAN ONE ACRE, IT THEREFORE FALLS UNDER THE STATE'S GENERAL NPDES PERMIT TO DISCHARGE STORMWATER ASSOCIATED WITH CONSTRUCTION ACTIVITY. THE ENGINEER WILL ASSIST THE CONTRACTOR IN SUBMITTING THE 'NOTICE OF INTENT (NOI) TO CONSTRUCT' TO THE STATE AT LEAST 30 DAYS PRIOR TO BEGINNING LAND DISTURBANCE.

811 Know what's below. Call before you dig.

Gresham Smith
GreshamSmith.com
222 Second Avenue South
Suite 1400
Nashville, TN 37201
615.770.8100

WASH N ROLL
WNRI HOLDINGS, LLC
P.O. Box 1955
Mt. Juliet, TN 37121

JAMES LEVI SCIARA
REGISTERED ENGINEER
AGRICULTURE
No. 120791
STATE OF TENNESSEE
Levi Sciara
Digitally signed by Levi Sciara
DN: cn=Levi Sciara, o=Gresham Smith and Partners, ou=Nashville, l=Tennessee, c=US
Date: 2022.06.03 11:40:19-05'00'
This sheet has been signed, sealed, and dated digitally

Revision

No.	Date	Description

GENERAL NOTES

C001

45251.06
06.02.2022

This Line Is 3 Inches When Printed Full Size

\\global.gsp\data\nfna_nf08\45251.06\01Work\01CAD\06LP\Sheets\4525106_C-000.dwg - Malachi Soldner - 6/3/2022 10:09:25 AM

LEGEND

- PROPERTY LINE
- PROPERTY SETBACK LINE
- BUILDING LINE
- BUILDING CANOPY
- CURB
- CURB & GUTTER
- RETAINING WALL
- HEAVY DUTY CONCRETE PAVEMENT
- GRAVEL
- CONCRETE SIDEWALK
- CROSS-WALK
- TRANSFORMER PAD
- TURN ARROW
- ACCESSIBLE PARKING SPACE SYMBOL
- PARKING COUNT
- LIGHT POLE
- SIGN
- BOLLARD

WASH N' ROLL SITE DATA

DEVELOPER:

WNR1 HOLDINGS, LLC
MT. JULIET, TN 37121
BRIAN PETERSON 763.370.8345
JEREMY HALL 615.772.1572

ARCHITECT:

KEN ADKISSON, ARCHITECT
615.298.9829

CIVIL ENGINEER:

GRESHAM SMITH
222 SECOND AVENUE SOUTH
NASHVILLE, TN 37201
LEVI SCIARA, P.E.
LEVI.SCIARA@GRESHAMSMITH.COM
615.770.8213

PROPERTY INFORMATION:

1206 WEST AVENUE
CROSSVILLE, TN 38555
PARCEL ID: 100J B 012.00
TOTAL AREA: 1.06 ACRES
PROPOSED USE: CAR WASH
ZONING: 10-COMMERCIAL

PARKING DATA:

PARKING PROVIDED = 16 SPACES
HC REQUIRED = 1 (1 VAN)
QUEUE REQUIRED = 5 SPACES
QUEUE PROVIDED = 8 SPACES

ITEMS BY OWNER:

DETAILS TO BE PROVIDED BY OWNER

1. EMPLOYEE ENTRANCE ONLY SIGN
2. ENTRANCE SIGN
3. DO NOT ENTER SIGN
4. SUN SHADE
5. GATE
6. DUMPSTER ENCLOSURE
7. MONUMENT SIGN

MECHANICAL / HVAC UNITS

ALL MECHANICAL AND HVAC UNITS ARE LOCATED INSIDE OF THE BUILDING.

Easement and/or Agreement between Food City and Wash N Roll will be required prior to the issuance of a building permit/Storm water Land disturbance permit.

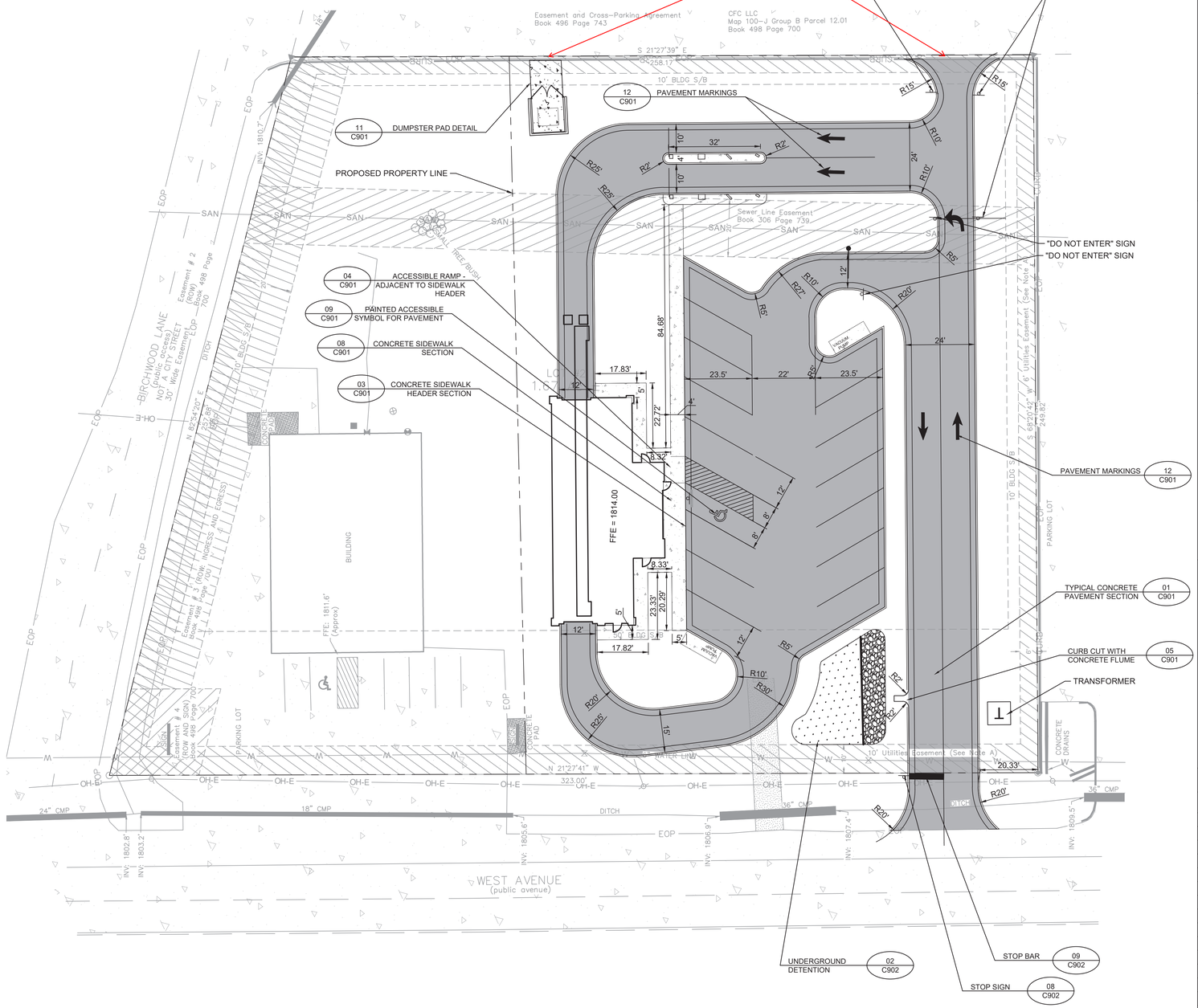

Gresham Smith

GreshamSmith.com

222 Second Avenue South
Suite 1400
Nashville, TN 37201

615.770.8100

WASH N ROLL
WNRI HOLDINGS, LLC
P.O. Box 1955
Mt. Juliet, TN 37121

JAMES LEVI SCIARA REGISTERED ENGINEER AGRICULTURE No. 120791 STATE OF TENNESSEE

Levi Sciara

This sheet has been signed, sealed, and dated digitally

Revision

No.	Date	Description

SITE LAYOUT PLAN

C200

45251.06
06.02.2022

This Line Is 3 Inches When Printed Full Size

\\global.gsp\data\vn\na_nf08\45251\06\01\Work\01CAD\06LP\Sheets\4525106_C-200.dwg - Malachi Soldner - 6/3/2022 10:10:30 AM

LEGEND

	PROPERTY LINE
	BUILDING LINE
	EXISTING MAJOR CONTOUR
	EXISTING MINOR CONTOUR
	MAJOR CONTOUR
	MINOR CONTOUR
	RETAINING WALL
	STORM PIPE
ST ST	STORM PIPE
	STORM STRUCTURES
	HEADWALL
	STORM MANHOLE
	CATCH BASIN
	COMBINATION INLETS
	STORM CLEANOUT
STRUCTURE A4 RIM:195.11 A5	STRUCTURE LABEL
198.50	SPOT ELEVATION
198.50(F)	FLUSH ELEVATION
198.80 TOP OF CURB 198.30 BOTTOM OF CURB	CURB ELEVATION

DISTURBED AREA

TOTAL DISTURBED AREA = 1.00 ACRES

IMPERVIOUS AREA

EXISTING IMPERVIOUS AREA = 0.54 ACRES
PROPOSED IMPERVIOUS AREA = 0.46 ACRES

STRUCTURE TABLE				
STRUCTURE	TYPE	RIM	PIPE IN : I.E.	PIPE OUT : I.E.
ST1	HW	1808.92	ST2-ST1 - 15" HDPE (E) : 1807.40	
ST2	OS	1813.37	ST3-ST2 - 15" HDPE (E) : 1808.08	ST2-ST1 - 15" HDPE (W) : 1808.07
ST3	UD	1813.16		ST3-ST2 - 15" HDPE (W) : 1808.25
ST5	CI	1813.06		ST5-ST6 - 15" HDPE (E) : 1810.20
ST6	UD	1812.89	ST5-ST6 - 15" HDPE (W) : 1810.01	
ST10	CI	1813.79		ST10-ST11 - 15" HDPE (S) : 1811.29
ST11	UD	1814.46	ST10-ST11 - 15" HDPE (N) : 1810.61	

PIPE TABLE				
NAME	MATERIAL	DIA.	APPROX. LENGTH	SLOPE
ST2-ST1	HDPE	15"	30'	2.23%
ST3-ST2	HDPE	15"	41'	0.41%
ST5-ST6	HDPE	15"	25'	0.77%
ST10-ST11	HDPE	15"	72'	0.94%

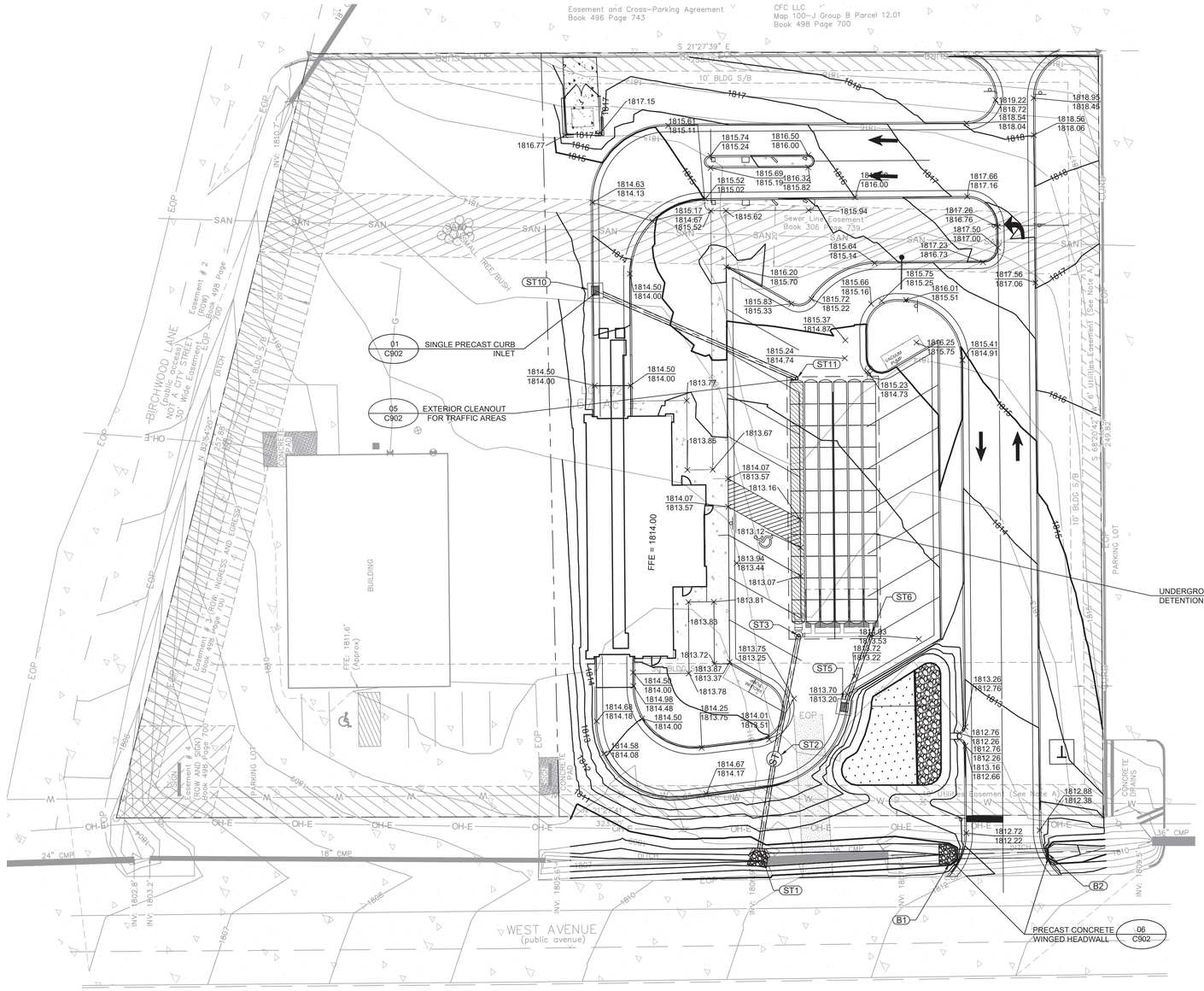

STRUCTURE TABLE				
STRUCTURE	TYPE	RIM	PIPE IN : I.E.	PIPE OUT : I.E.
B1	HW	1812.00	ELLIPTICAL RCP (29x45) : 1808.50	
B2	HW	1812.30		ELLIPTICAL RCP (29x45) : 1808.80

NORTH

10' 0 10' 20'
GRAPHIC SCALE

Gresham Smith
GreshamSmith.com
222 Second Avenue South
Suite 1400
Nashville, TN 37201
615.770.8100

WASH RoLL
WNRI HOLDINGS, LLC
P.O. Box 1955
Mt. Juliet, TN 37121

JAMES LEVI SCIARA
REGISTERED ENGINEER
AGRICULTURE
No. 120791
STATE OF TENNESSEE
Levi Sciara
Digitally signed by Levi Sciara
DN: cn=Levi Sciara, o=Gresham Smith and Partners, ou=Nashville, l=Tennessee, c=US
Date: 2022.06.03 10:46:26-05'00'
This sheet has been signed, sealed, and dated digitally

Revision		
No.	Date	Description

GRADING PLAN

C300

45251.06
06.02.2022

This Line Is 3 Inches When Printed Full Size

\\global.gsp\data\vn\na_nf08\45251\06\01\Work\01CAD\06LP\Sheets\4525106_C-300.dwg - Malachi Soldner - 6/3/2022 9:30:14 AM

06/03/2022

LEGEND

——— — — ———	PROPERTY LINE
— — — 1845 — — —	EXISTING MAJOR CONTOUR
— — — — 1844 — — — —	EXISTING MINOR CONTOUR
—— · —— · —— · ——	LIMITS OF DISTURANCE
——SF——SF——	SILT FENCE
——FS——FS——	12" FILTER SOCK

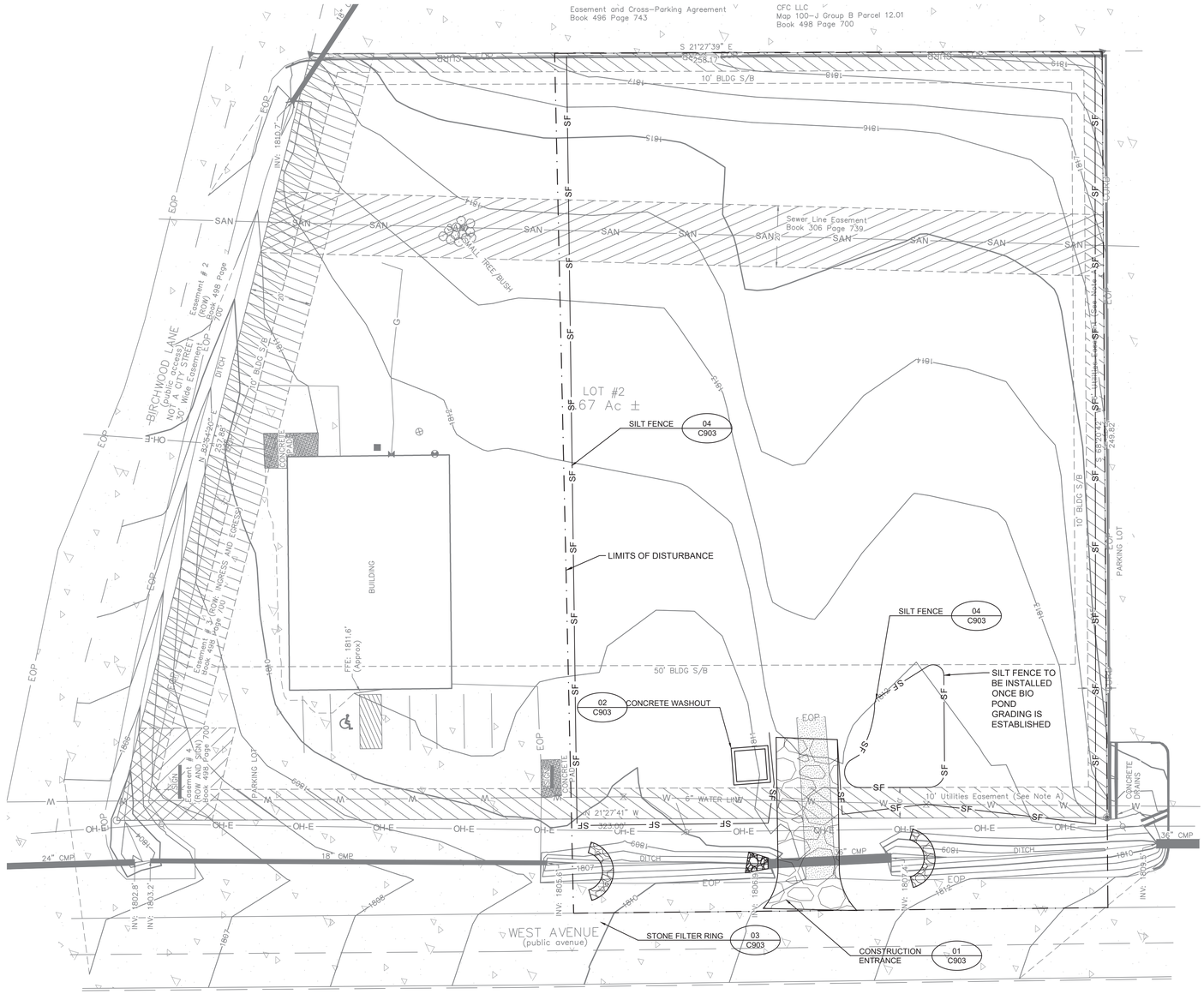

NORTH

20' 0 20' 40'
GRAPHIC SCALE

Gresham Smith

GreshamSmith.com

222 Second Avenue South
Suite 1400
Nashville, TN 37201

615.770.8100

WASH N ROLL

WNRI HOLDINGS, LLC
P.O. Box 1955
Mt. Juliet, TN 37121

JAMES LEVI SCIARA
REGISTERED ENGINEER
AGRICULTURE
No. 120751
STATE OF TENNESSEE

Levi Sciara

Digitally signed by Levi Sciara
DN: cn=Levi Sciara, c=US, o=Gresham Smith, ou=Nashville, email=levi.sciara@gresham.com
Date: 2022.06.03 11:40:27-05'00'

This sheet has been signed, sealed, and dated digitally

Revision

No.	Date	Description

INITIAL EPSC PLAN

C400

45251.06
06.02.2022

This Line Is 3 Inches When Printed Full Size

\\global.gsp\data\nfna_nf08\4525106\01Work\01CAD\06LP\Sheets\4525106_C-400.dwg - Malachi Soldner - 6/3/2022 10:12:06 AM

LEGEND

	PROPERTY LINE
1845	EXISTING MAJOR CONTOUR
1844	EXISTING MINOR CONTOUR
	LIMITS OF DISTURANCE
SF	SILT FENCE
FS	12" FILTER SOCK
	INLET PROTECTION
	STONE FILTER RING

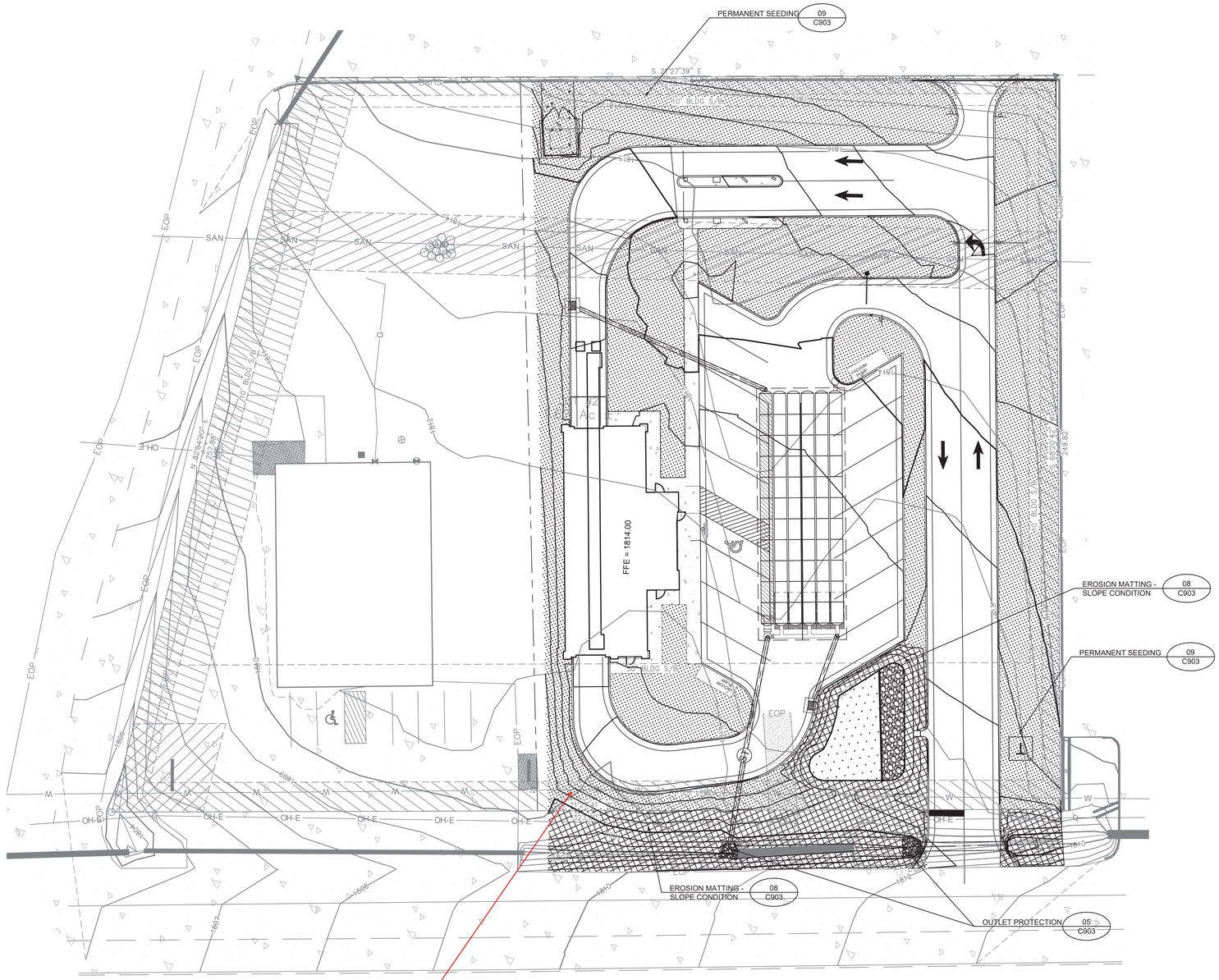

LEGEND

	PROPERTY LINE
	BUILDING LINE
W	WATER LINE (SIZE VARIES)
FW	FIRE LINE (SIZE VARIES)
	SANITARY SEWER
SAN	SANITARY SEWER
	LIGHT POLE
	STORM SEWER
	UTILITY EASEMENT
OH-E	OVERHEAD ELECTRIC
UG-E	UNDERGROUND ELECTRIC
G	NATURAL GAS

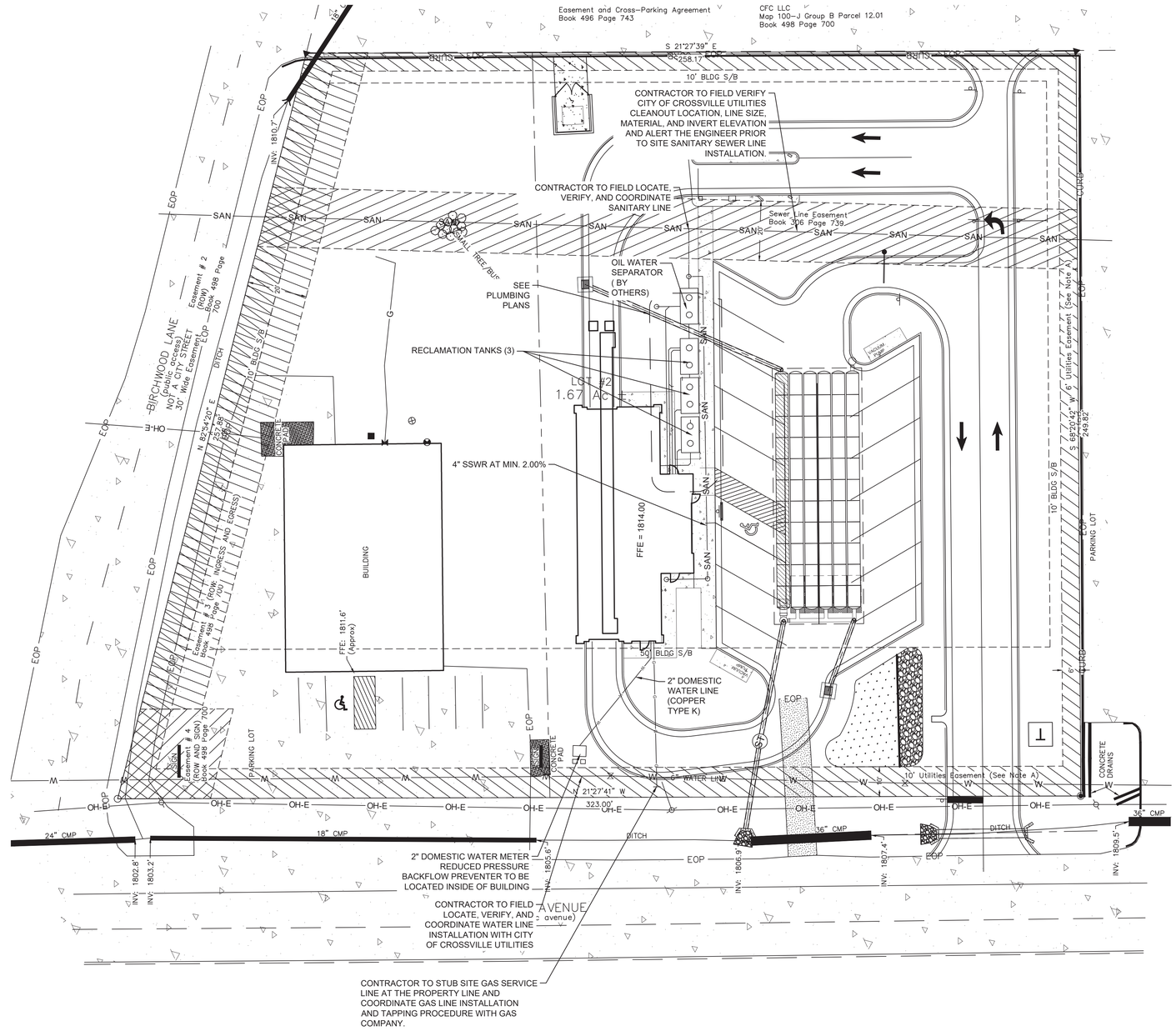

NORTH

20' 0 20' 40'
GRAPHIC SCALE

Gresham Smith
GreshamSmith.com
222 Second Avenue South
Suite 1400
Nashville, TN 37201
615.770.8100

WASH/ROLL
WNRI HOLDINGS, LLC
P.O. Box 1955
Mt. Juliet, TN 37121

JAMES LEVI SCIARA
REGISTERED ENGINEER
AGRICULTURE
No. 120791
STATE OF TENNESSEE
Levi Sciara
Digitally signed by Levi Sciara
DN: C=US, O=Gresham Smith, CN=Levi Sciara, E=levi.sciara@gresham.com
Reason: I attest the accuracy and integrity of this document
Date: 2022.06.03 11:40:59-05'0'
This sheet has been signed, sealed, and dated digitally

Revision

No.	Date	Description

SITE UTILITY PLAN

C500

45251.06
06.02.2022

This Line Is 3 Inches When Printed Full Size

\\global.gsp\data\nfna_nf08\45251.06\01Work\01CAD\06LP\Sheets\45251.06_C-500.dwg - Malachi Soldner - 6/3/2022 10:13:45 AM

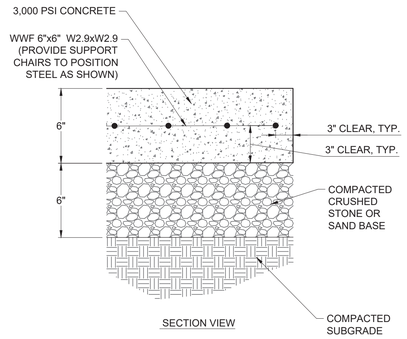

01 C901

TYPICAL CONCRETE PAVEMENT SECTION

NOT TO SCALE

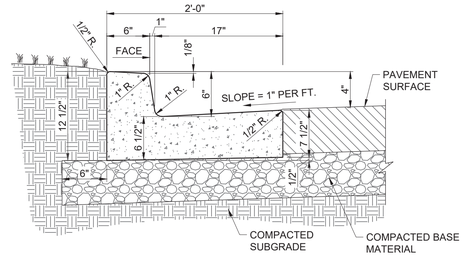

TYPICAL CROSS-SECTION

NOTES:

1. CURB AND GUTTER SHALL BE CONSTRUCTED IN 10 FOOT LENGTHS, OR EXTRUDED AND THEN SAWCUT AT 10 FOOT INTERVALS TO A DEPTH OF 1.75".
2. 1/2" EXPANSION JOINTS SHALL BE PROVIDED AT INTERVALS NOT TO EXCEED 100 FEET, AT THE ENDS OF CIRCULAR RETURNS, LINING UP WITH PAVEMENT JOINTS WHERE ADJACENT PAVEMENT IS CONCRETE, AND AT ALL POINTS WHERE THE NEW CURB AND GUTTER ABUTS OTHER CONCRETE STRUCTURES OR INLET CASTINGS.
3. 10' LONG TRANSITIONS SHALL BE PROVIDED BETWEEN NORMAL GUTTER AND REVERSE-PITCHED GUTTER, UNLESS OTHERWISE NOTED ON THE PAVING PLANS.
4. ALL CONCRETE SHALL HAVE A MINIMUM COMPRESSIVE STRENGTH OF 3,000 PSI (TYP.)
5. PROVIDE REVERSE-PITCHED GUTTER WHERE GRADING PLAN INDICATES SLOPE AWAY FROM CURB.

02 C901

24" CONCRETE CURB AND GUTTER

NOT TO SCALE

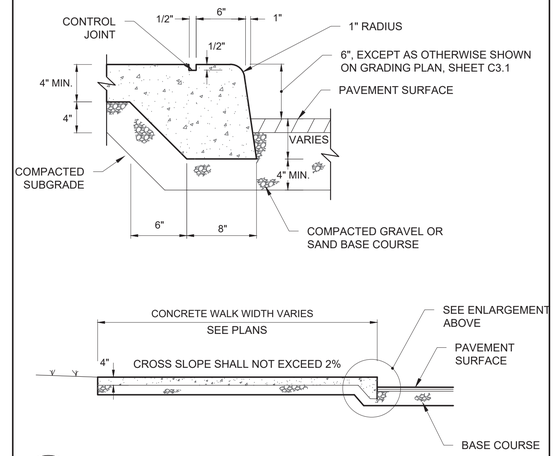

03 C901

CONCRETE SIDEWALK HEADER SECTION

NOT TO SCALE

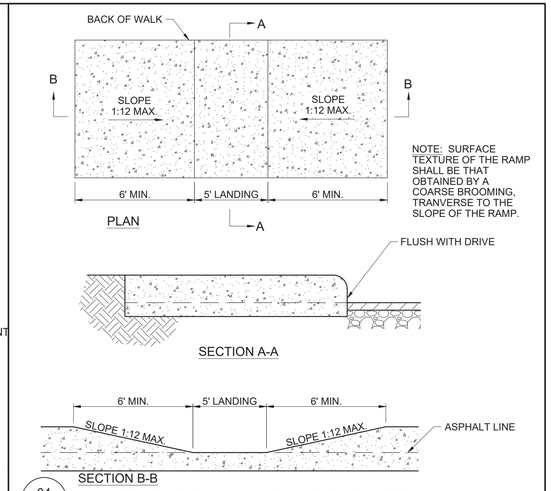

04 C901

ACCESSIBLE RAMP - ADJACENT TO SIDEWALK HEADER

NOT TO SCALE

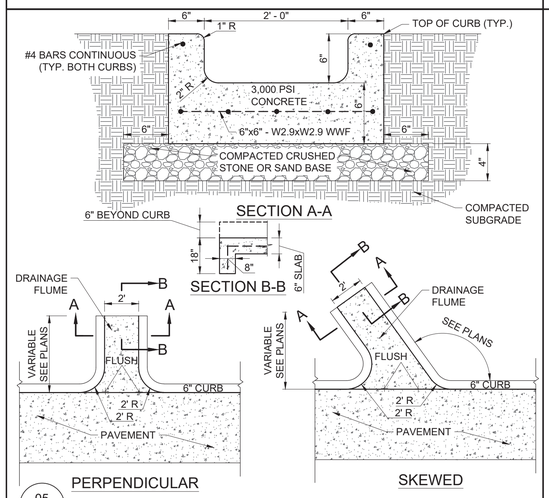

05 C901

CURB CUT WITH CONCRETE FLUME

NOT TO SCALE

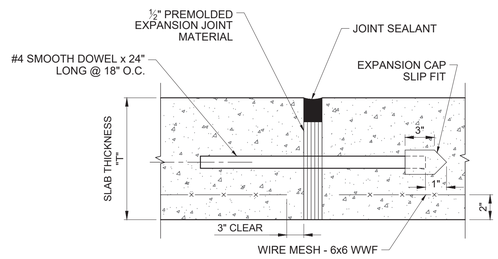

PARKING LOT EXPANSION JOINTS TO BE INSTALLED IN 3 LOCATIONS:

1. IN THE PARKING LOT LIMITS ALONG A LINE EXTENDED FROM THE FACE OF THE BUILDING.
2. ALONG THE PERIMETER OF THE DUMPSTER PAD ABUTTING THE CONCRETE PAVEMENT.
3. ALONG CONNECTION OF PARKING LOT TO ANY CONCRETE DRIVEWAY RAMPS.

06 C901

EXPANSION JOINT

NOT TO SCALE

NOTE: CONTRACTION JOINTS TO BE SPACED EVERY 10'

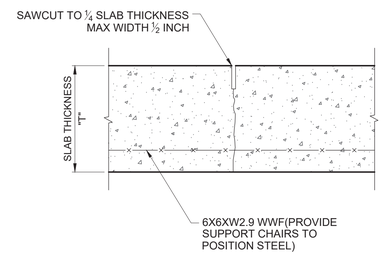

07 C901

CONTRACTION JOINTS IN CONCRETE

NOT TO SCALE

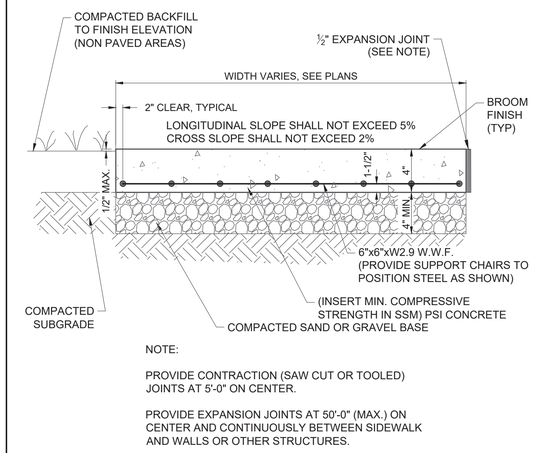

NOTE:

PROVIDE CONTRACTION (SAW CUT OR TOOLED) JOINTS AT 5'-0" ON CENTER.

PROVIDE EXPANSION JOINTS AT 50'-0" (MAX.) ON CENTER AND CONTINUOUSLY BETWEEN SIDEWALK AND WALLS OR OTHER STRUCTURES.

08 C901

CONCRETE SIDEWALK SECTION

NOT TO SCALE

4"x4" GRID PROVIDED FOR LAYOUT OF SYMBOL. PROVIDE PAINT COLORS IN ACCORDANCE WITH ADA AND LOCAL REQUIREMENTS (TYPICALLY WHITE SYMBOL ON BLUE BACKGROUND INSIDE WHITE BORDER).

09 C901

PAINTED ACCESSIBLE SYMBOL FOR PAVEMENT

NOT TO SCALE

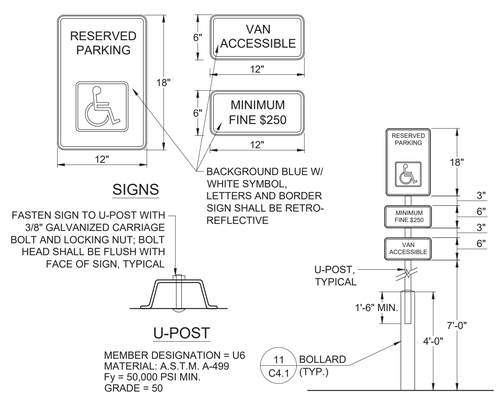

10 C901

ACCESSIBLE PARKING SIGN

NOT TO SCALE

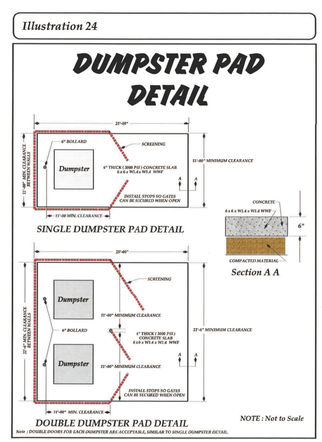

11 C901

DUMPSTER PAD DETAIL

NOT TO SCALE

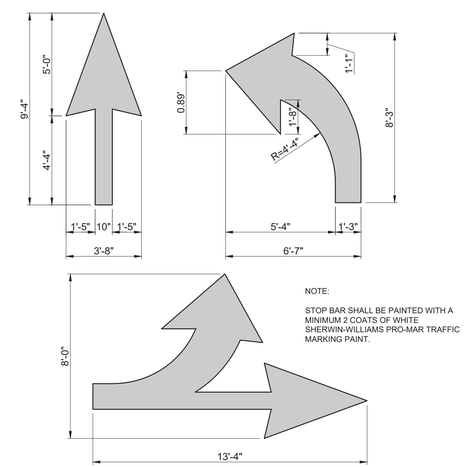

NOTE:

STOP BAR SHALL BE PAINTED WITH A MINIMUM 2 COATS OF WHITE SHERWIN-WILLIAMS PRO-MAR TRAFFIC MARKING PAINT.

12 C901

PAVEMENT MARKINGS

NOT TO SCALE

Gresham Smith

GreshamSmith.com

222 Second Avenue South
Suite 1400
Nashville, TN 37201

615.770.8100

WASH N ROLL
WNRI HOLDINGS, LLC
P.O. Box 1955
Mt. Juliet, TN 37121

Levi Sciara

This sheet has been signed, sealed, and dated digitally

Revision

No.	Date	Description

SITE DETAILS

C901

45251.06
06.02.2022

This Line Is 3 Inches When Printed Full Size

\\global.gspdata\vnfna_nf08\45251\06\01\Work\01CAD\06LP\Sheets\4525106_C-900.dwg - Malachi Soldner - 6/3/2022 10:14:28 AM

NOTES:

1. PRECAST 4' DIAMETER CIRCULAR SECTION MAY BE USED IN LIEU OF THAT SHOWN FOR PIPE SIZES UP TO 24".
2. CONCRETE TO BE A MINIMUM OF 4,000 P.S.I. AT 28 DAYS AND REINFORCED WITH MIN. OF NO. 4, GRADE 60 STEEL.
3. CASTING EQUAL OF NEENAH R-3246, WITH TYPE C GRATE OR EJIW 7030, WITH TYPE M2 GRATE AND T1 BACKING COMBINATION. IN ON-GRADE CONDITIONS, A VANE GRATE SHALL BE USED EQUAL OF NEENAH R-3246, WITH TYPE L GRATE OR EJIW 7030, WITH TYPE M6 VANE GRATE. ALL CASTINGS ARE DESIGNED TO MEET AASHTO M306 LOADING, AND SHALL HAVE THE WORDS "DUMP NO WASTE" AND "DRAINS TO WATERWAY" ALONG WITH A FISH LOGO CAST INTO THE GRATE OR HOOD.
4. FOR RCP CONNECTIONS TO STRUCTURES USE NON-SHRINK GROUT OR RUBBER GASKET PER ASTM C923 OR C1478.
5. JOINT CONNECTIONS BETWEEN PLASTIC FLEXIBLE PIPE AND STRUCTURES SHALL HAVE A GASKET MEETING ASTM F2510. FOR CMP PIPE TO STRUCTURE CONNECTIONS OR PLASTIC PIPE AT A SKEW GREATER THAN 15°, WHERE A GASKET WILL NOT WORK, NON-SHRINK GROUT APPLIED IN TWO STAGES SHALL BE USED.

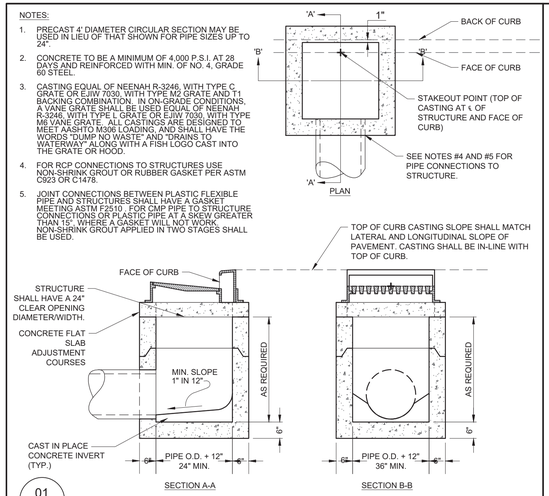

01 C902

SINGLE PRECAST CURB INLET
NOT TO SCALE

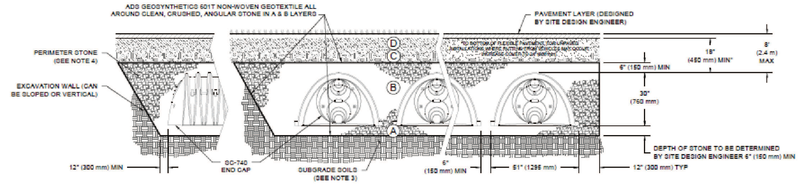

NOTES:
BASIS OF DESIGN IS AN
ADS STORMTECH SYSTEM
WITH SC-740 CHAMBERS.

02 C902

UNDERGROUND DETENTION
NOT TO SCALE

NOTES:
STRUCTURE SHALL BE
PRECAST CONCRETE WITH
MIN. 28-DAY COMPRESSIVE
STRENGTH OF 4,000 PSI

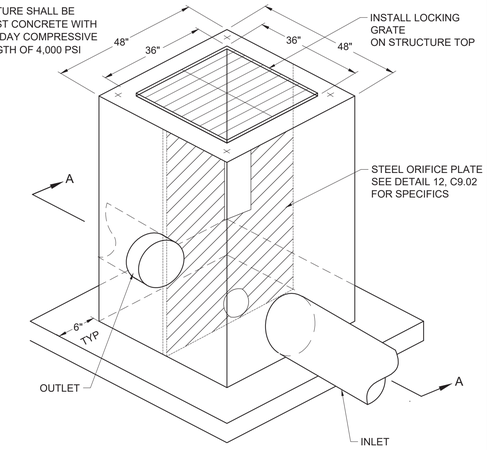

03 C902

OUTLET STRUCTURE
NOT TO SCALE

BIORETENTION NOTES:
1. PLANTING SOIL INFILTRATION RATE SHALL BE 1 INCH PER HOUR MINIMUM.
2. FILTER MEDIA SHALL BE PER METRO NASHVILLE STORMWATER GIP-01.
   - SAND 70% TO 85%
   - SILT + CLAY 10-20%, WITH NO MORE THAN 10% CLAY
   - 5-10% ORGANIC MATTER
3. SOIL FILTER FABRIC SHALL BE A NON-WOVEN GEOTEXTILE FABRIC WITH A FLOW RATE OF > 110 GAL./MIN./FT². APPLY ONLY TO THE POND SIDES AND ABOVE THE UNDERDRAIN.
4. MULCH SHALL BE SHREDDED, AGED HARDWOOD MULCH OR PINE STRAW.
5. STORAGE LAYER SHALL CONSIST OF CLEAN, WASHED #57 STONE.

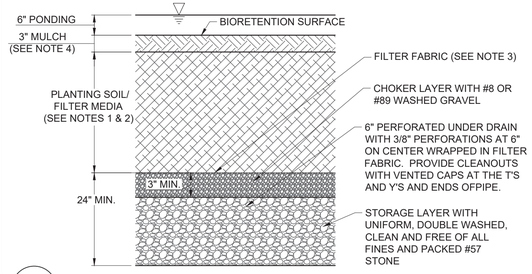

04 C902

BIORETENTION
NOT TO SCALE

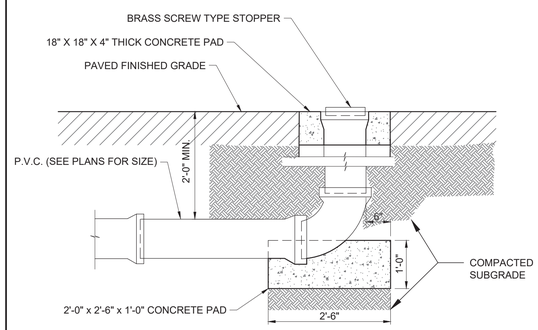

05 C902

EXTERIOR CLEANOUT FOR TRAFFIC AREAS
NOT TO SCALE

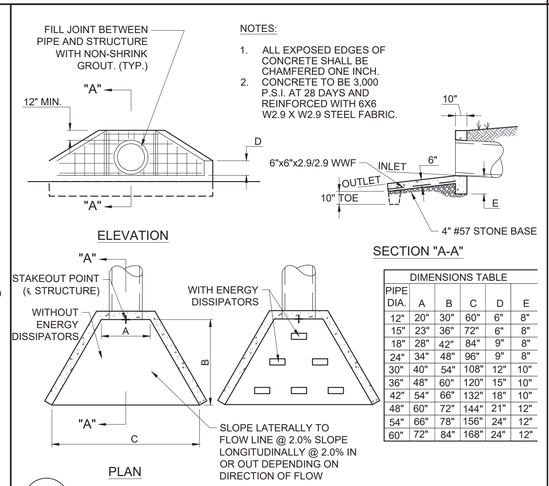

NOTES:
1. ALL EXPOSED EDGES OF CONCRETE SHALL BE CHAMFERED ONE INCH.
2. CONCRETE TO BE 3,000 P.S.I. AT 28 DAYS AND REINFORCED WITH 6X6 W2.9 X W2.9 STEEL FABRIC.

DIMENSIONS TABLE					
PIPE DIA.	A	B	C	D	E
12"	20"	30"	60"	6"	8"
15"	23"	36"	72"	6"	8"
18"	28"	42"	84"	9"	8"
24"	34"	48"	96"	9"	8"
30"	40"	54"	108"	12"	10"
36"	48"	60"	120"	15"	10"
42"	54"	66"	132"	18"	10"
48"	60"	72"	144"	21"	12"
54"	66"	78"	156"	24"	12"
60"	72"	84"	168"	24"	12"

06 C902

PRECAST CONCRETE WINGED HEADWALL
NOT TO SCALE

RIP-RAP STABILIZATION TO BE HAND PLACED NATIVE STONE, 2" TO 1'-3" IN DIAMETER, WITH NO MORE THAN 20% BY WEIGHT BEING LESS THAN 4" IN DIAMETER, MINIMUM 1'-6" DEPTH.

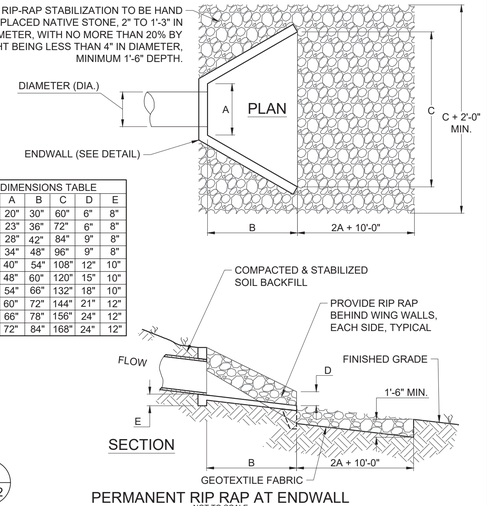

DIMENSIONS TABLE					
DIA.	A	B	C	D	E
12"	20"	30"	60"	6"	8"
15"	23"	36"	72"	6"	8"
18"	28"	42"	84"	9"	8"
24"	34"	48"	96"	9"	8"
30"	40"	54"	108"	12"	10"
36"	48"	60"	120"	15"	10"
42"	54"	66"	132"	18"	10"
48"	60"	72"	144"	21"	12"
54"	66"	78"	156"	24"	12"
60"	72"	84"	168"	24"	12"

07 C902

PERMANENT RIP RAP AT ENDWALL
NOT TO SCALE

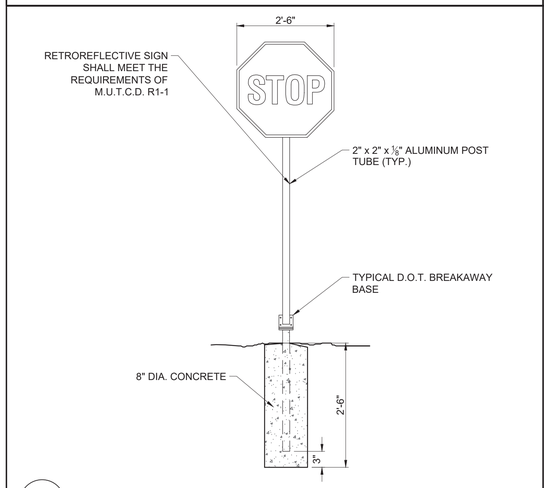

08 C902

STOP SIGN
NOT TO SCALE

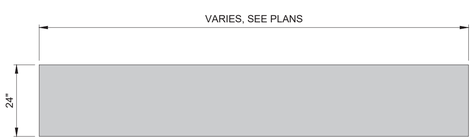

NOTES:
1. STOP BAR SHALL BE PAINTED WITH A MINIMUM 2 COATS OF WHITE SHERWIN-WILLIAMS PRO-MAR TRAFFIC MARKING PAINT.
2. EDGE OF STOP BAR SHALL BE PARALLEL TO EDGE OF HIGHWAY TRAVEL WAY.

09 C902

STOP BAR
NOT TO SCALE

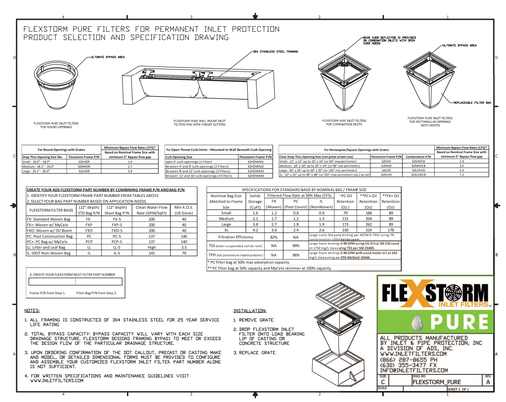

10 C902

FLEXSTORM PURE FILTER
NOT TO SCALE

NOTE:

PLATE SHALL BE MADE OF ⅜" STEEL AND SECURED TO THE OUTLET STRUCTURE WITH A MEANS OF PERMANENT INSTALLATION. THE PLATE SHALL FIT TIGHT ENOUGH THAT NO WATER SHALL PASS AROUND THE PLATE WITH THE EXCEPTION OF THE ORIFICE HOLES AND WEIR TOP.

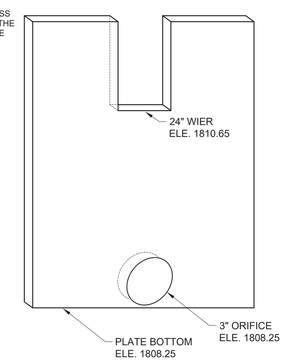

SITE DETAILS

C902

45251.06
06.02.2022

Gresham Smith
GreshamSmith.com
222 Second Avenue South
Suite 1400
Nashville, TN 37201
615.770.8100

WASH N' ROLL
WNRI HOLDINGS, LLC
P.O. Box 1955
Mt. Juliet, TN 37121

JAMES LEVI SCIARA REGISTERED ENGINEER AGRICULTURE No. 120791 STATE OF TENNESSEE
Levi Sciara
Digitally signed by Levi Sciara
DN: cn=Levi Sciara, o=Gresham Smith, ou=Nashville, L=Tennessee, C=US
2022.06.06 09:49:27 -05'00'
This sheet has been signed, sealed, and dated digitally

Revision

No.	Date	Description

This Line Is 3 Inches When Printed Full Size

\\global.gsp\data\vn\na_nf08\452510601\Work\01CAD\06LP\Sheets\4525106_C-900.dwg - Malachi Soldner - 6/3/2022 10:14:34 AM

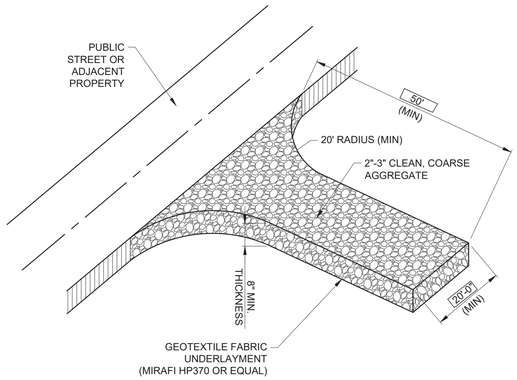

ISOMETRIC VIEW

01 C903

CONSTRUCTION ENTRANCE
NOT TO SCALE

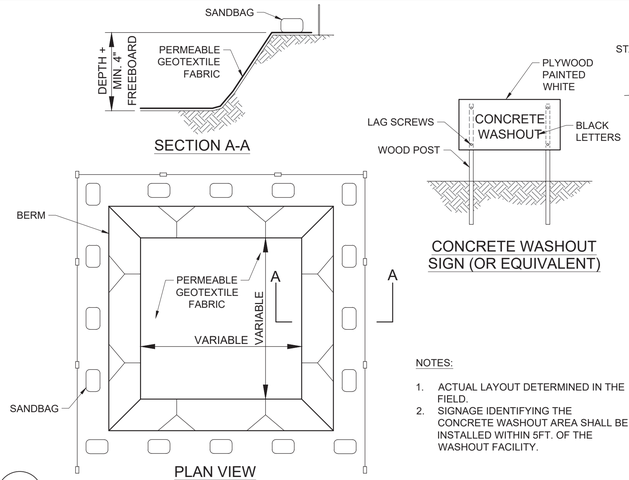

NOTES:

1. ACTUAL LAYOUT DETERMINED IN THE FIELD.
2. SIGNAGE IDENTIFYING THE CONCRETE WASHOUT AREA SHALL BE INSTALLED WITHIN 5FT. OF THE WASHOUT FACILITY.

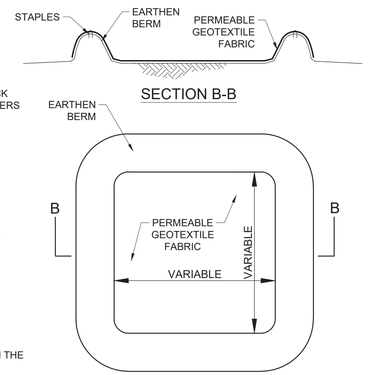

02 C903

CONCRETE WASHOUT
NOT TO SCALE

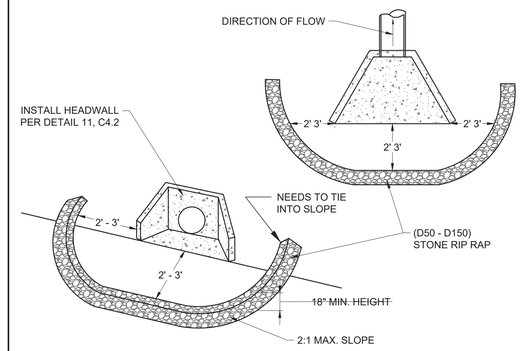

NOTES:
1. INSPECT STONE FILTER RING ONCE FINAL STABILIZATION HAS OCCURRED AND REPAIR AS NECESSARY.

03 C903

STONE FILTER RING
NOT TO SCALE

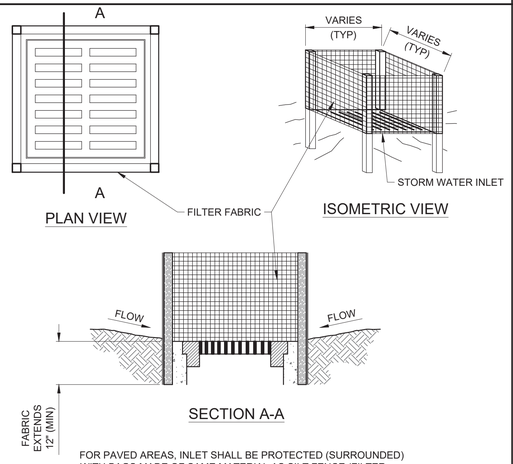

FOR PAVED AREAS, INLET SHALL BE PROTECTED (SURROUNDED) WITH BAGS MADE OF SAME MATERIAL AS SILT FENCE (FILTER FABRIC) AND FILLED ⅔ FULL WITH CLEAN #57 OR #67 CRUSHED STONE.

04 C903

SILT FENCE
NOT TO SCALE

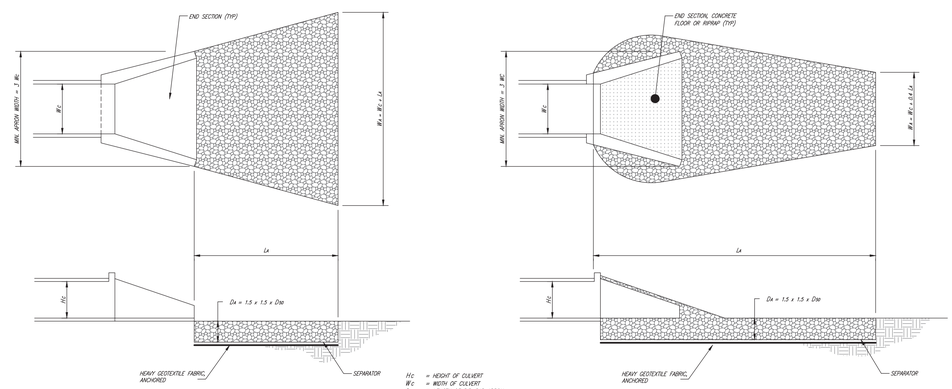

Hc = HEIGHT OF CULVERT
Wc = WIDTH OF CULVERT
La = LENGTH OF RIP-RAP APRON
Wa = WIDTH OF RIP-RAP APRON AT END
D50 = MEDIAN RIP-RAP SIZE
Dmax = MAXIMUM SIZE OF RIP-RAP = 1.5 D50
Da = DEPTH OF RIP-RAP APRON = 1.5 Dmax
SEPARATOR = GEOTEXTILE UNDERLAYMENT OR GRAVEL FILTER BLANKET

TAILWATER < 0.5 Hc AND ASSUMING FULL CULVERT FLOW (LOW TAILWATER CONDITIONS)

TAILWATER > 0.5 Hc AND ASSUMING FULL CULVERT FLOW (HIGH TAILWATER CONDITIONS)

EROSION CONTROL PLAN LEGEND:

05 C903

OUTLET PROTECTION
NOT TO SCALE

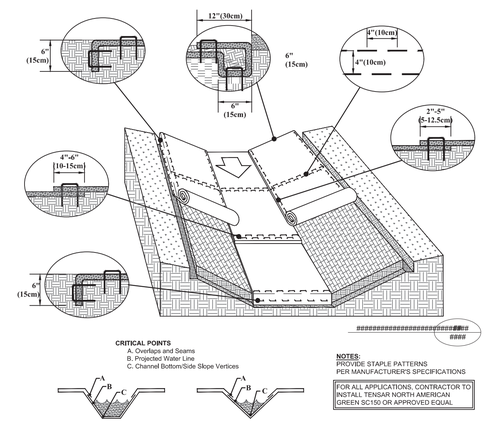

06 C903

EROSION MATTING - CONVEYANCE
NOT TO SCALE

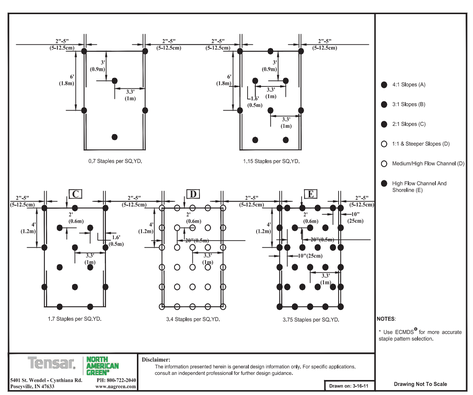

07 C903

EROSION MATTING - STAPLE PATTERN
NOT TO SCALE

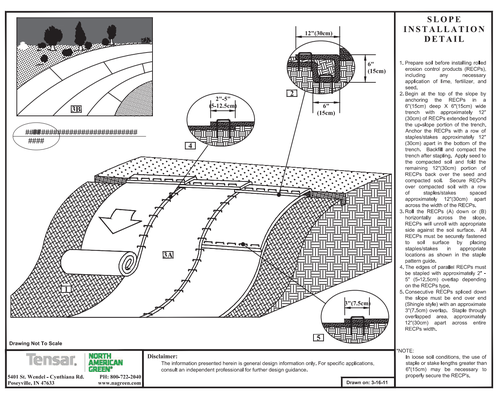

FOR ALL APPLICATIONS, CONTRACTOR TO INSTALL TENSAR NORTH AMERICAN GREEN SC150 OR APPROVED EQUAL

NOTES:
PROVIDE STAPLE PATTERNS PER MANUFACTURER'S SPECIFICATIONS

08 C903

EROSION MATTING - SLOPE CONDITION
NOT TO SCALE

TABLE 7.9-1 PREFERRED SEED MIXES USING NATIVES OR NATURALIZED PLANTS AND PLANTING DATES

Region II	Low maintenance; Slopes and Poor, shallow soils	Aug 25 – Sept 15 **Feb 15 – May 30**	Sept 15 – Oct 25 Mar 21 – May 30	15 Browntop millet* (nurse crop) 5 little bluestem 2 switch grass 2 tall dropseed 5 sideoats gramma 2 black-eyed susan 2 partridge pea 1 greyheaded coneflower
	Low maintenance; Moderate slopes; soils >6 in. depth	Aug 25 – Sept 15 **Feb 15 – May 30**	Sept 15 – Oct 25 Mar 21 – Apr 15	15 Browntop millet* (nurse crop) 5 purpletop 5 little bluestem 5 Virginia wild rye 2 black-eyed susan 2 partridge pea 1 greyheaded coneflower
	High maintenance	Aug 30 – Oct 15	Feb 15 – Apr 15	15 Browntop millet* (nurse crop) 2 partridge pea 45 Red fescue* 45 hard fescue* 25 chewing fescue*

TABLE 7.9-2 ALLOWABLE SEED MIXES AND PLANTING DATES

Region II	Low maintenance; Slopes and Poor, shallow soils	Aug 25 – Sept 15 **Feb 15 – Mar 21**	Sept 15 – Oct 25 Mar 21 – Apr 15	100 Pensacola bahiagrass
	Low maintenance; Moderate slopes; soils >6 in. depth	Aug 25 – Sept 15 **Feb 15 – Mar 21**	Sept 15 – Oct 25 Mar 21 – Apr 15	40 Bermudagrass (hulled) 20 Korean lespedeza** 10 Kobe lespedeza**
	Low maintenance; Moderate slopes; soils >6 in. depth	Aug 25 – Sept 15 **Feb 15 – Mar 21**	Sept 15 – Oct 25 Mar 21 – Apr 15	80 Pensacola bahiagrass 30 Bermudagrass (hulled) 20 Korean lespedeza** 10 Kobe lespedeza**
	High maintenance	Aug 15 – Oct 15	Feb 15 – Apr 15	200 KY 31 fescue*#

NOTES:

1. APPLICATION OF TEMPORARY OR PERMANENT STABILIZATION MUST BE INITIATED WITHIN 14 DAYS TO DISTURBED AREAS OF A SITE WHERE CONSTRUCTION ACTIVITIES HAVE TEMPORARILY OR PERMANENTLY CEASED, AND WITHIN 10 DAYS OF REACHING FINAL SUBGRADE ELEVATION.
2. REFERENCE TDEC: TENNESSEE EROSION AND SEDIMENT CONTROL HANDBOOK CHAPTER 7, SECTION 7.8, FOR REQUIRED B.M.P.'S, CONSTRUCTION SPECIFICATIONS, MAINTENANCE, AND INSPECTION POINTS.

09 C903

Construction Specifications

Grading and Shaping: Grading and shaping may not be required where hydraulic seeding and fertilizing equipment is to be used. Vertical banks shall be sloped to enable plant establishment.

When conventional seeding and fertilizing are to be done, grade and shape the slope, where feasible and practical, so that equipment can be used safely and efficiently during seedbed preparation, seeding, mulching, and maintenance of vegetation.

Concentrations of water that could cause excessive soil erosion should be diverted to a safe outlet. Diversions and other treatment practices must conform to the appropriate standards and specifications.

Plant Selection: Only certified seed shall be used. Refer to Table 7.9-1 for suggested species. Grass type should be selected on the basis of species characteristics; site and soil conditions; planned use and maintenance of the area; time of year of planting, method of planting; and the needs and desires of the land user.

Plant selection may also include annual companion crops. Annual companion crops should be used only when the perennial species are not planted during their optimum planting period. Care should be taken in selecting companion crop species and seeding rates because annual crops will compete with perennial species for water, nutrients, and growing space. A high seeding rate of the companion crop may prevent the establishment of perennial species.

Ryegrass shall not be used in any seeding mixtures containing permanent, perennial species due to its ability to out-compete desired species chosen for permanent perennial cover. However, cutoness, clover, oats and winter wheat can be planted any time of the year and are recommended as a cover crop with native perennial species.

Topsoil: Topsoil should be replaced on all areas to be seeded. See Practice 7.3 for more information on the removal, storage and reapplication of topsoil.

Seedbed Preparation: When conventional seeding is to be used, topsoil should be applied to any area where the disturbance results in subsoil at the final grade surface. Figure 7.9-3 provides guidance on the volume of topsoil required to provide specific topsoil depths. Soil pH should be above 5 – preferably between 6.0 and 6.5. Soil on the site should be tested to determine lime and fertilizer rates. Soil should be submitted to a soils specialist or County Agricultural Extension agent for testing and soil amendment recommendations. In the absence of soil test results, the following application rates can be used:

- **Ground agricultural limestone:**
  Light-textured, sandy soils: 1- 1 1/2 tons/acre
  Heavy-textured, clayey soils: 2-3 tons/acre
- **Fertilizer:**
  Grasses: 800-1200 lb/acre of 10-10-10 (or the equivalent)
  Grass-legume mixtures: 800-1200 lb/acre of 5-10-10 (or the equivalent)

Broadcast Seeding:

- Seedbed preparation may not be required where hydraulic seeding equipment is to be used.
- Tillage, at a minimum, shall adequately loosen the soil to a depth of 4 to 6 inches; alleviate compaction; incorporate topsoil, lime, and fertilizer; smooth and firm the soil; allow for the proper placement of seed, sprigs, or plants; and allow for the anchoring of straw or hay mulch if a crimper is to be used.
- Tillage may be done with any suitable equipment.
- Tillage should be done parallel to the contour where feasible.
- On slopes too steep for the safe operation of tillage equipment, the soil surface shall be pitted or trenched across the slope with appropriate hand tools to provide consecutive beds, 6 to 8 inches apart, in which seed may lodge and germinate. Hydraulic seeding may also be used.

Depth (Inches)	Per 1,000 Square Feet	Per Acre
1	3.1	134
2	6.2	268
3	9.3	403
4	12.4	537
5	15.5	672
6	18.6	806

7.9-3 Cubic yards of topsoil required to attain various soil depths

Inoculants: Native legume seeds do not need to be inoculated. All non-native legume seed shall be inoculated with appropriate nitrogen fixing bacteria. The inoculants shall be pure culture prepared specifically for the seed species and used within the dates on the container. A mixing medium recommended by the manufacturer shall be used to bond the inoculants to the seed. For conventional seeding, use twice the amount of inoculants recommended by the manufacturer.

No-Till Seeding: No-till seeding is permissible into annual cover crops when planting is done following maturity of the cover crop or if the temporary cover stand is sparse enough to allow adequate growth of the permanent (perennial) species. No-till seeding shall be done with appropriate no-till seeding equipment. The seed must be uniformly distributed and planted at the proper depth. Native grasses respond very well to drill seeding at a depth of one-fourth inch.

Mulch: Straw mulch is required for all permanent vegetation applications and must be applied immediately after the application of seed. The application rate for mulch is 2 tons per acre with overall uniform soil coverage of 70%. All mulch must be anchored. See Practice 7.6 for more information on straw mulch.

PERMANENT SEEDING
NOT TO SCALE

Gresham Smith

GreshamSmith.com

222 Second Avenue South
Suite 1400
Nashville, TN 37201

615.770.8100

WASH-N-ROLL
WNRI HOLDINGS, LLC
P.O. Box 1955
Mt. Juliet, TN 37121

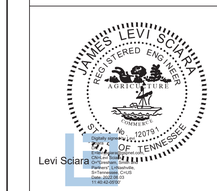

This sheet has been signed, sealed, and dated digitally

Revision

No.	Date	Description

SITE DETAILS

C903

45251.06
06.02.2022

This Line Is 3 Inches When Printed Full Size

\\global.gsp\data\nfina_nf08\4525106\01Work\01CAD\06L\PlSheets\45251 06_C-900.dwg - Malachi Soldner - 6/3/2022 10:14:40 AM